S·N·G
BARRATT
GROUP

XJS

THE PARTS COLLECTION

FIND US...

With over 30 years experience in supplying Jaguar parts, SNG Barratt Group are the World's largest independent specialists, with a Head Office in the UK and branches in the USA, France and Holland. We stock and supply parts for Jaguar cars from 1949 right through to the present day.

SNG BARRATT LTD
BRIDGNORTH, UNITED KINGDOM

T: +44 (0)1746 765432 E: sales.uk@sngbarratt.com

SNG BARRATT USA
NEW HAMPSHIRE, USA

T: +1 800 452 4787 E: sales.usa@sngbarratt.com

SNG BARRATT FRANCE
CHARNEY-LES-MACON

T: +33 (0)3 85 20 14 20 E: france@sngbarratt.com

SNG BARRATT NL
OISTERWIJK

T: +31 (0)1352 11 552 E: sales.nl@sngbarratt.com

SNG BARRATT GERMANY
OISTERWIJK, NL

T: 018 01 833 833 (DE only) E: sales.de@sngbarratt.com

ALL INCLUDED IMAGES & DATA
© SNG BARRATT GROUP LTD. 2018

KEEPING JAGUARS PURRING

ALL OVER THE WORLD

EXPERIENCE, KNOWLEDGE & EXPERT ADVICE

MULTILINGUAL STAFF TO HELP CUSTOMERS WORLDWIDE

EXTENSIVE WAREHOUSES

1-2 DAY SHIPPING

24 HOUR ONLINE ORDERING & UP-TO-DATE STOCK AVAILABILITY

INTERACTIVE PARTS SEARCH & FREE CATALOGUES

Welcome to the SNG Barratt Jaguar XJS Parts Catalogue

Following the Worldwide success of our Definitive Jaguar Owners Catalogue which covers over 20 classic models in one 300 page publication we have taken the decision to release a range of more detailed catalogues for each of the more popular models that we cover. This will allow us to better illustrate the parts we have available and to make identification of the item required a little easier.

How to use this catalogue...

Use the illustration in each section to identify the component that you require. Note the indicated item number and find the corresponding number in the section listing. There you will see our part number for that item and to it's right the quantity required per car. Very often this will be the original Jaguar part number, thus allowing you to refer to an original factory parts catalogue if more detail is required.

Each part number is listed in our price list. This listed price is per item and is plus VAT except in the case of books and other VAT exempt items.

If you then quote this part number when contacting our sales department, we will be able to confirm the cost and whether we have the part in stock.

If you cannot conclusively identify the item that you require then please call and we will assist you. Our staff have many years of experience with all aspects of the Jaguar marque and may have just the answer...

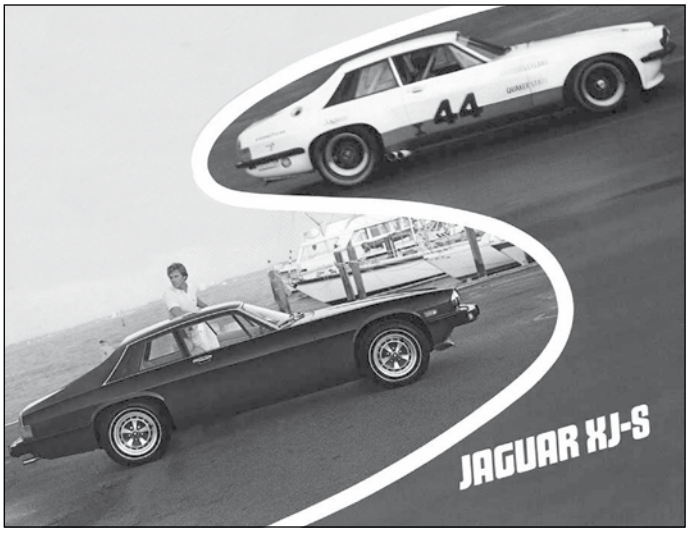

Your customer number

Upon dealing with SNG Barratt for the first time you will be allocated a customer number. In many cases this will be your UK postcode. If you are overseas your sales advisor will use either your zip code or a number made using your surname. This customer number can either be found on your invoice or simply by asking the person serving you. The ability to provide your customer number when contacting our sales department will allow us to access your information far faster and serve you even more efficiently.

Customer number.....

Your vehicle details

Please complete this section as accurate vehicle information at your finger tips will prove to be invaluable. Very often identifying the correct part for you car can be all down to chassis or engine number. These details can best be found on the car itself, as registration documents can often prove to be incorrect due to engine swaps and vehicle upgrades that the DVLA have not been advised of. Please refer to the Vehicle Identification section on page 2 if you wish to cross reference any information.

Year of manufacture.....

Chassis/VIN number.....

Engine **3.6 / 4.0 / 5.3 / 6.0**

Engine number.....

Gearbox **Automatic / Manual**

Guide to Contents

Engine

3.6 & 4.0 Engine Block	3
3.6 & 4.0 Oil Pump	5
3.6 & 4.0 Water Pump	6
Oils, Fluids & Consumables	6
3.6 & 4.0 Cylinder Head	7
3.6 & 4.0 Timing Gear	8
5.3 & 6.0 Engine Block	9
5.3 & 6.0 Oil Pump	10
5.3 & 6.0 Water Pump	11
5.3 & 6.0 Oil Filter	11
5.3 & 6.0 Cylinder Head	12
5.3 & 6.0 Timing Gear	14
Oil Coolers	14
Quick Reference Service Spares	16

Fuel System

Fuel Injection Components	15

Transmission

Clutch	17
Manual Gearbox	18
Automatic Gearbox Spares	19
Propshaft	20
Differential	22

Brakes, Suspension & Steering

Front Suspension	25
Rear Suspension	28
Front & Rear Brakes	32
Braking System Components to VIN198335	35
Braking System Components VIN198335 on	36
Road Wheels to VIN179736	37
Road Wheels VIN179737 on	38
Steering	40

Cooling, Exhaust & Fuel Systems

Cooling System to VIN179736	42
Cooling System VIN179737 on	44
Fuel System to 1991	46
Fuel System 1991 on	48
Exhaust System	50

Body & Body Fittings

Body Panels	52
Body Fittings	55
Body Glass & Rubbers	57
Bumpers	60

Lighting & Electrical System

Lamps	64
Gauges & Switches	67
General Electrics	69
Wash Wipe	71
Heating & Air Conditioning	73

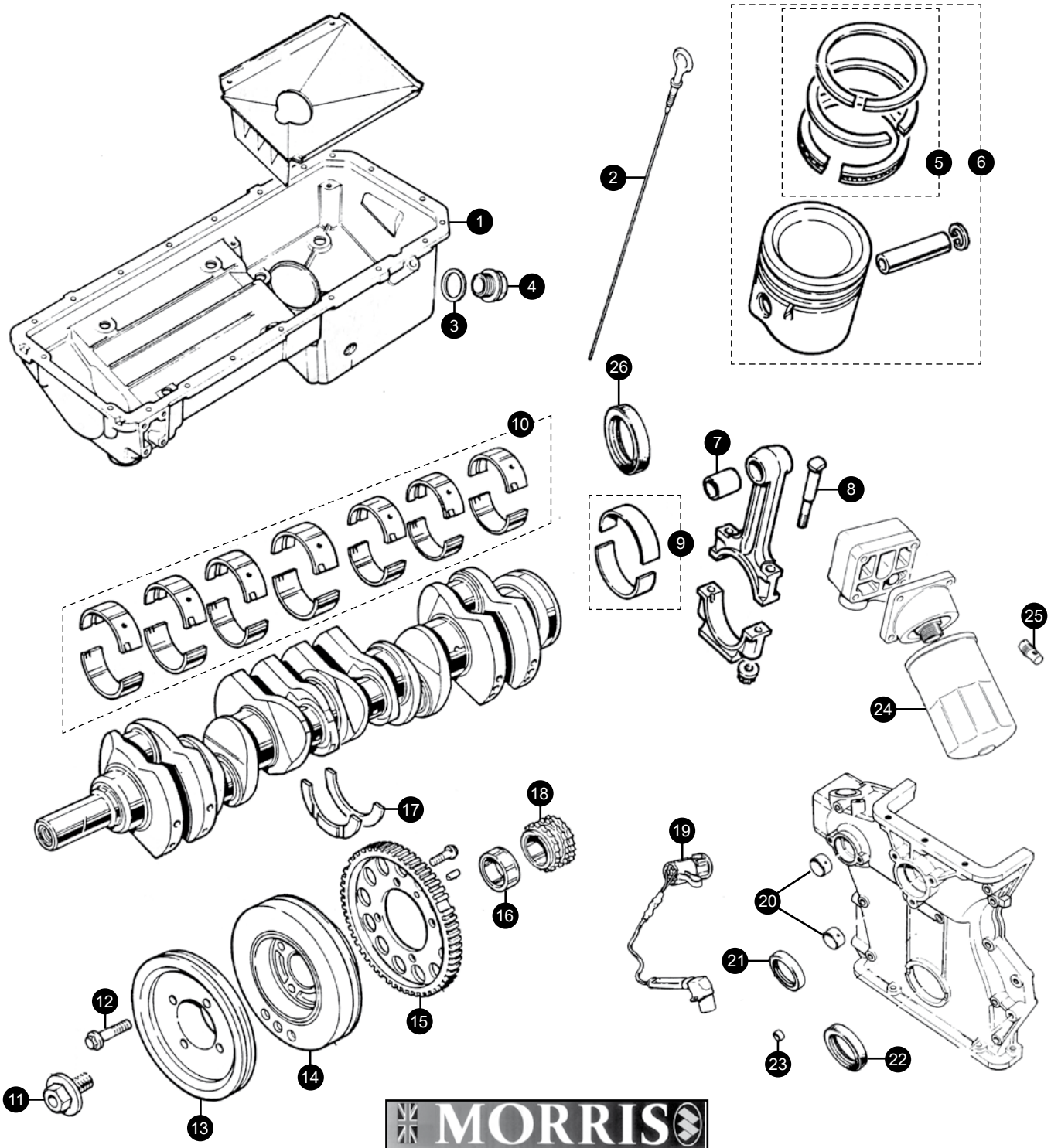

MORRIS

Please turn to page 6 for
a full range of quality oils,
fluids & consumables.

3.6 & 4.0 Engine Block

1. Sump			
XJS 3.6		EAC4460	1
XJS 4.0	to 185750	EAC8427	1
	185751 to186194	EBC3892	1
	186195 on	NBC1701AA	1
2. Oil level dipstick			
XJS 3.6	to 101807	EAC4775	1
	101808-104287	EAC7321	1
	104288 on	EAC9276	1
XJS 4.0		EAC9276	1
3. Sump drain plug		EAC3972	1
4. Washer			
XJS 3.6		EAC3964	1
XJS 4.0		EBC9044	1
5. Piston ring set			
XJS 3.6	to 103704	RTC2879	6
	103705 on	JLM581S	6
XJS 4.0		JLM1818S	6
6. Engine piston			
XJS 3.6	to 103704	EAC7168	6
	103705 on	EBC3554S	6
XJS 4.0		EBC11058S	6
7. Small end bush			
XJS 3.6		EAC2732	6
XJS 4.0		EAC6567	6
8. Connecting rod bolt		EAC1027	6
9. Connecting rod bearings		RTC2854S	1 set
10. Crankshaft main bearings		JLM1817S	1 set
11. Crankshaft damper bolt		C323671	1
12. Crankshaft pulley bolt		FB108091J	4
13. Crankshaft pulley			
XJS 3.6		EAC4056	1
XJS 4.0			
14. Crankshaft damper			
XJS 3.6		EAC3810	1
XJS 4.0	to 163522	EBC1441	1
	163523 to 196089	EBC9618	1
	B100136 on	EBC10059	1
15. Timing ring			
XJS 3.6		EAC4920	1
XJS 4.0		EAC6850	1
16. Spacer		EAC2464	1
17. Crankshaft thrust washer		C34697	2
18. Timing chain gear		EAC2456	
19. Crankshaft speed sensor			
	3.6	DBC2139	1
	4.0	DBC11501	1
20. Bush		EAC2522	2
21. Seal		EAC7263	1
22. Seal		EAC7954	1
23. Dowel		EBC9705	2
24. Oil filter		EBC9658	1
25. Bypass valve		EAC2428	1
26. Rear crankshaft oil seal		EAC4974	1

Not illustrated

Bottom end seal set		
3.6	JLM114	1
4.0	JLM11474	1

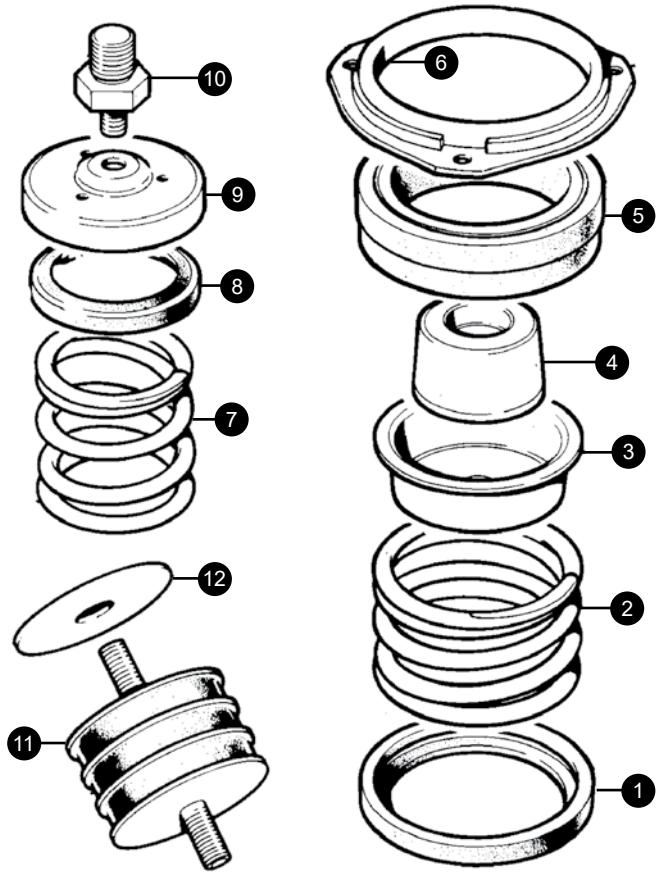

1. Spring seat	CBC1883	1
2. Outer coil spring	CBC4744	1
3. Cradle	CBC1319	1
4. Centre locating weight	MMB7558AA	1
5. Foam buffer	MHG7566AA	1
6. Buffer ring	CCC6910	1
7. Inner spring	CBC4745	1
8. Spring seat rubber	CAC9343	1
9. Spring seat	CBC1329	1
10. Adaptor	CBC1320	1
11. Engine mounting		
RH	MMB7520BA	1
LH	MHC7521AA	1
12. Insulator	CBC5931	2

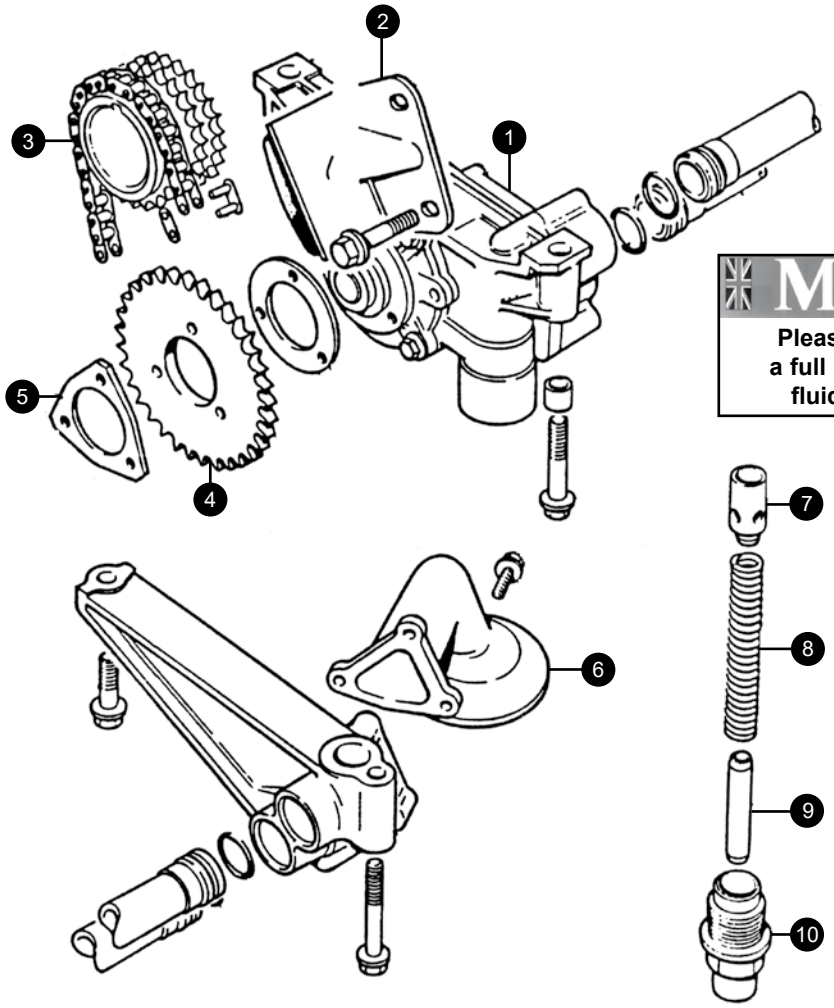

MORRIS

Please turn to page 6 for
a full range of quality oils,
fluids & consumables.

1. Oil pump assembly			
XJS 3.6		**EBC11571**	**1**
XJS 4.0	**to 171064**	**EBC11571**	**1**
	171065 on	**NBB1760AA**	**1**
2. Tensioner blade		**EBC3823**	**1**
3. Oil pump chain		**JLM1279**	**1**
4. Oil pump sprocket		**EAC6395**	**1**
5. Tab washer		**EAC4505**	**1**
6. Oil suction pickup			
XJS 3.6		**EAC4504**	**1**
XJS 4.0		**EAC7355**	**1**
7. Oil relief valve plunger*		**EAC4326**	**1**
8. Oil relief valve spring*		**EAC4380**	**1**
9. Support mandrel*		**EAC4327**	**1**
10. Oil relief valve plug*		**EAC4328**	**1**

*** Only fitted to 171064 on XJS 4.0**

3.6 & 4.0 Water Pump

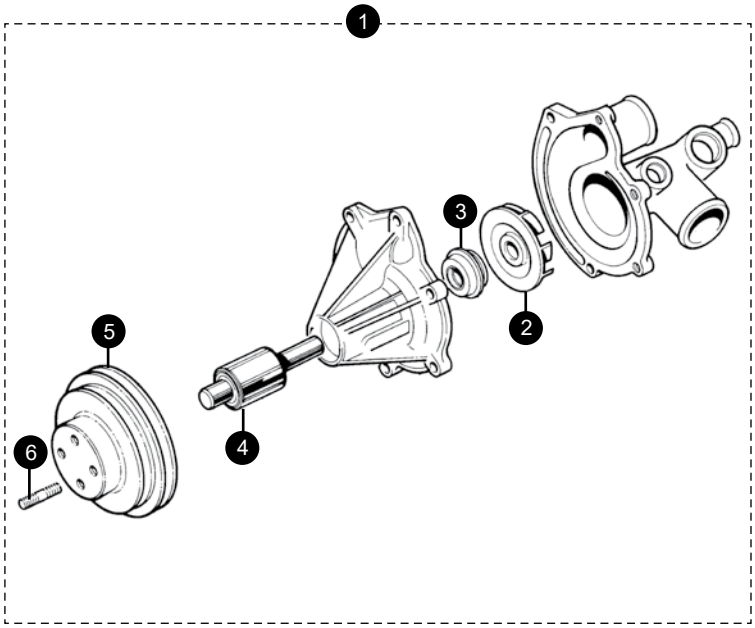

1. Water pump assembly			
XJS 3.6	4 groove pulley	EBC8550	1
XJS 3.6 & 4.0	5 groove pulley	NBB2200DA	1
2. Impellor			
XJS 3.6	early	EAC4457	1
XJS 3.6 & 4.0	late	EAC7220	1
3.Seal		EBC3131	1
4. Bearing		NBC2209BA	1
5. Pulley			
XJS 3.6 & 4.0	4 groove	EAC6651	1
XJS 4.0	5 groove	EBC4425	1
6. Stud		TE108031J	4

Oils, Fluids & Consumables

MORRIS

We stock a full range of quality Morris Lubricants (blending oils in Shrewsbury since 1869) that are entirely suitable for both the classic and current Jaguar range.

Oil 20W/50	gallon	MOR001
Oil 20W/50	1 litre	MOR002
Oil 15W/50	5 litre	MOR004
Oil 15W/50	1 litre	MOR005
Oil 1OW/40	semi synthetic - 5 litre	MOR007
Oil 1OW/40	semi synthetic - 1 litre	MOR008
Oil 5W/30	semi synthetic - 5 litre	MOR010
Oil 5W/30	semi synthetic - 1 litre	MOR011
Running in oil	5 litre	MOR013
Dextron 2 ATF	5 litre	MOR014
Dextron 2 ATF	1 litre	MOR015
EP80/90	gear oil - 5 litre	MOR020
EP80/90	gear oil - 1 litre	MOR021
LSD	gear oil - 5 litre	MOR022
Oil 10W/50	comp semi synthetic	MOR023
Mineral oil	1 litre	MOR025
Brake fluid	Dot 4 -1 litre	MOR027
Brake fluid	Dot 4 - 500ML	MOR028
Carb cleaning spray		MOR029
MD4	maintenance spray	MOR030
Pavan	degreaser	MOR031
Prima	silicone spray	MOR032
Prise	anti seize spray	MOR033
Solvent brake cleaner		MOR034
LM grease	500gm tin	MOR035
Copper slip	500gm tin	MOR036
Liquimatic ATF	5 litres	MOR045
Rubber Grease	500gm tin	RUBBERGREASE

+44 (0) 1746 765432
sales.uk@sngbarratt.com
+1 603 622 1050
sales.usa@sngbarratt.com
+33 3 85 201 420
sngbarratt.france@wanadoo.fr
+31 13 52 11 552
verkoop@sngbarratt.com

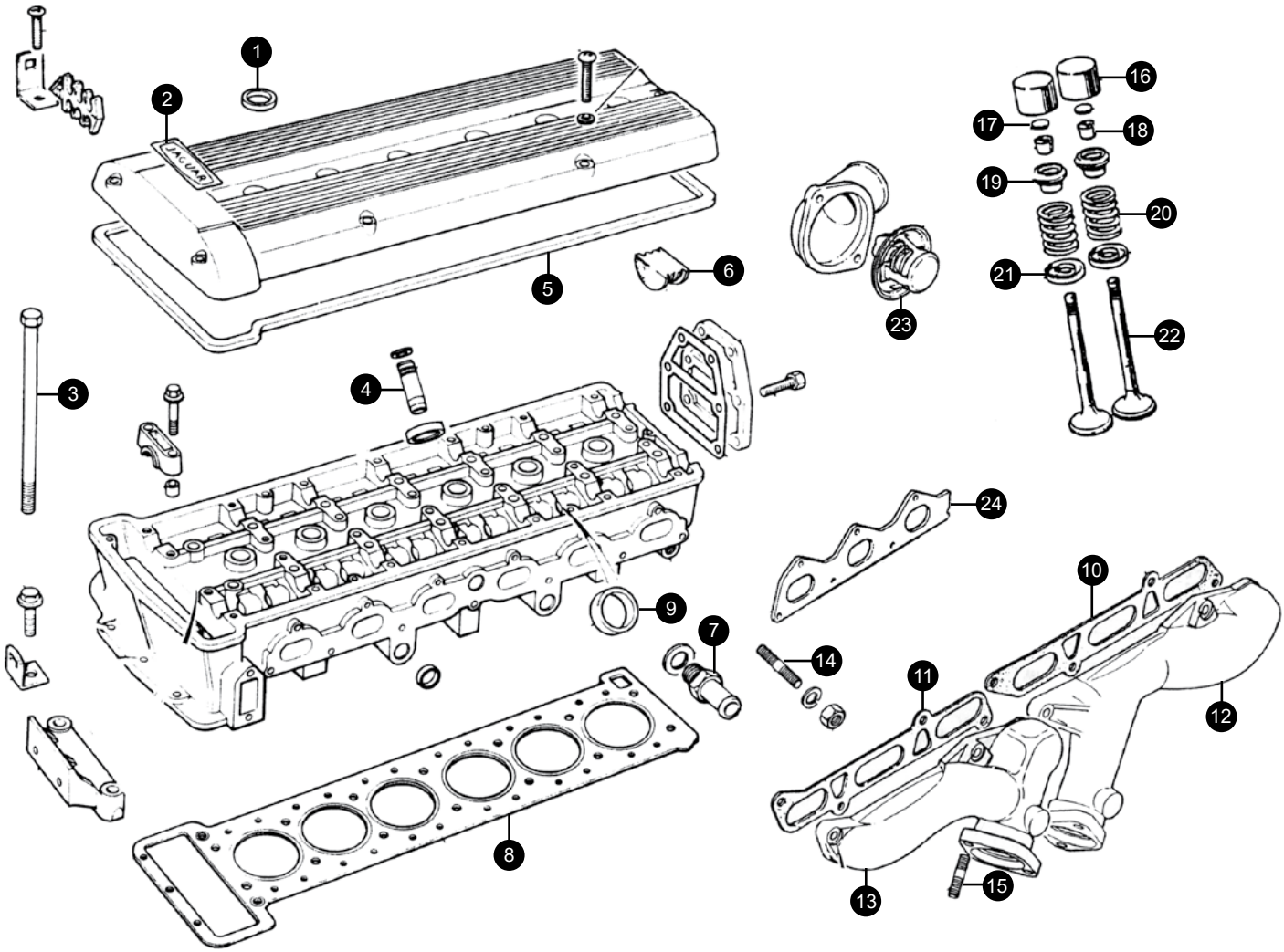

1. Spark plug boss seal		EAC4049	6
2. Camshaft cover decal			
	Jaguar	EAC9679	1
	Daimler	EAC9680	1
3. Head bolt		EBC1771	14
4. Valve guide			
Inlet/Exhaust	1st O/S	C29390	24
	2nd O/S	C29391	24
5. Camshaft cover gasket			
3.6*		EAC2912	1
4.0		NBC2525AA	1
* Also available as cam cover gasket kit with spark plug boss seals and cam cover end plugs		HL702	
6. Camshaft cover bung		C30431	1
7. Heater feed adaptor		EAC7189	1
Washer		C22964	1
8. Head gasket			
	3.6	NBC2520AB	1
	4.0	NBC2520AB	1
9. Valve insert			
3.6	Inlet	EAC6437	12
3.6	Exhaust	EBC4198	12
4.0	Inlet	EAC6437	12
	Exhaust	EBC4198	12
10. Front exhaust manifold gasket			
AJ6		EAC8994	1
AJ16		EBC11330	1
11. Rear exhaust manifold gasket			
AJ6		EAC8995	1
AJ16		NBC2909AA	1
12. Front exhaust manifold		EBC3599	1
13. Rear exhaust manifold		EBC3597	1
14. Stud	3.6	EBC3316	8
	Nut	FX110041	8
	4.0	EBC3316	8
	Nut to E187383	FX110041	8
	Nut from E187384	FX110041	8
15. Downpipe stud		EAC3823	8
16. Cam follower			
	3.6	EAC8418	24
	4.0	NBC2543AA	24

3.6 & 4.0 Timing Gear

17. Tappet shim		EBC113602 to 48	
18. Cotter			
3.6	Inlet & Exhaust	EBC2997	24
4.0	Inlet	EBC2997	12
	Exhaust	EBC2998	12
19. Valve collar			
3.6	Inlet	EAC4709	12
	Exhaust	EAC7227	12
4.0	Inlet	NBB2517AA	12
	Exhaust	EBC3807	12
20. Valve spring			
3.6	individually	EBC4871	24
4.0	individually	NBB2535AA	24
21. Valve spring seat			
3.6		C27481	24
4.0		EBC4902	24
22. Valve	Inlet	EAC2909	12
	Exhaust	EAC7255	12
23. Thermostat		EBC3621	1
24. Inlet manifold gasket			
AJ6		EBC2781	2
AJ16		EBC11081	1
25. Head gasket set		DT070	1

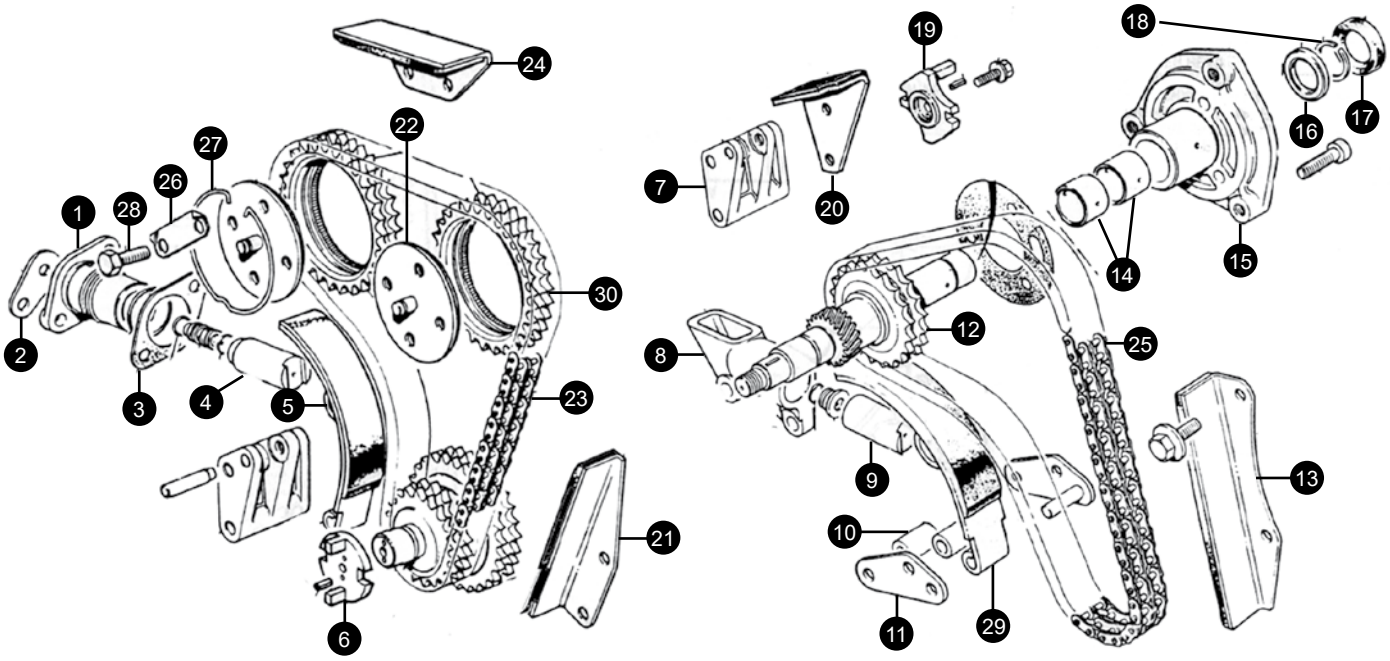

1. Piston housing	NBC2031AA	1
2. Piston housing end plate	EAC4650	1
3. Gasket	EAC4557	1
4. Piston	NBC1986AA	1
5. Tensioner blade assembly	EAC4536	1
6. Drive coupling	EBC3398	1
7. Pivot bracket	EAC6783	1
8. Piston housing	EAC6878	1
9. Piston assembly	NBC1986AA	1
10. Distance piece	EAC4531	2
11. Support plate	EAC4532	1
12. Auxiliary shaft	Please call	1
13. Chain guide	EAC4533	1
14. Bush	EAC2522	2
15. Housing auxiliary shaft	EAC3921	1
16. Thrust washer	EAC3455	1
17. Oil seal	EAC6156	1
18. Circlip	CR120225J	1
19. Drive dog	EBC3396	1
20. Upper chain guide	EAC6766	1
21. Lower chain guide	EAC4534	1
22. Camshaft coupling	C33889	2
23. Upper timing chain	EAC4520	1
24. Upper chain guide	EAC4535	1
25. Lower timing chain	EAC4519	1
26. Tab washer	C33917	4
27. Circlip (where fitted)	C30767	2
28. Setscrew	JZB100042	8
29. Chain tensioner	EAC4527	1
30. Upper camshaft sprocket		
3.6 all	C24686	2
4.0 to eng 148106	C24686	2
4.0 eng 148107 on	NBB2549AA	2

+44 1746 765432
sales.uk@sngbarratt.com
+33 385 201420
france@sngbarratt.com
018 01 833 833 (DE only)
sales.de@sngbarratt.com
+31 13 521 1552
sales.nl@sngbarratt.com
+1 800 452 4787
sales.usa@sngbarratt.com

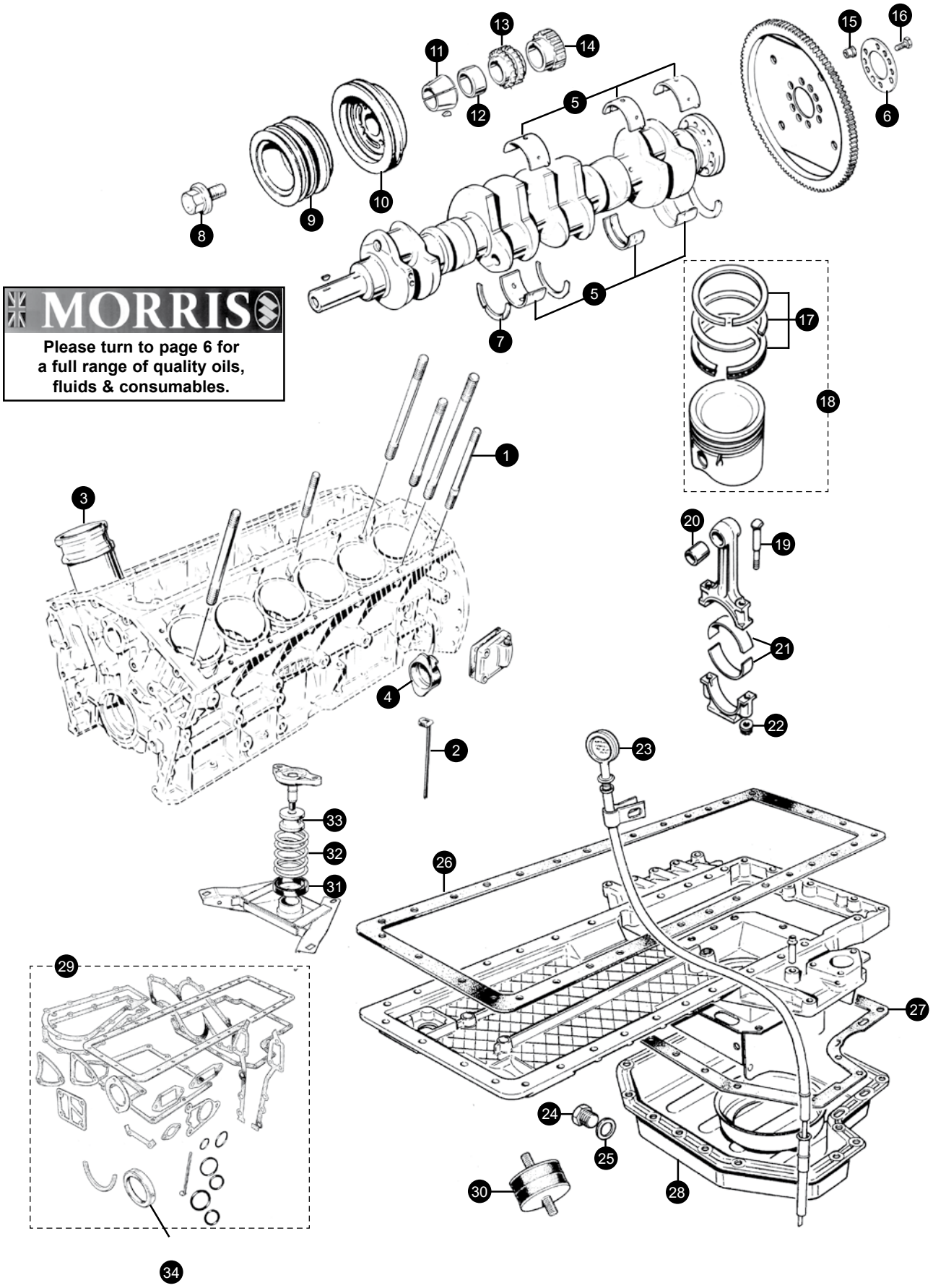
MORRIS
Please turn to page 6 for
a full range of quality oils,
fluids & consumables.
1
2
3
4
5
5
6
7
8
9
10
11
12
13
14
15
16
17
18
19
20
21
22
23
24
25
26
27
28
29
30
31
32
33
34

5.3 & 6.0 Engine Block

1. Cylinder head studs All models			
136mm NAB2646BA	4	120mm NAB2646CA	4
70mm C32680	12	215mm NAB2646AA	10
200mm NAB2646DA	10	131mm C32679	12

2. Bearing cap seal		C45154	2
3. Cylinder liner		BDS3	12
4. Flywheel inspection bung		C34016	1
5. Crankshaft main bearings	5.3	M7325SB	1 set
	6.0	please call	
6. Flywheel lock tab		C4810	1
7. Crankshaft thrust washer		C34697	2
8. Crankshaft pulley bolt		C323671	1
9. Crankshaft pulley		C37892	1
10. Crankshaft damper		C36013R	1
11. Crankshaft cone		C13892	1
12. Distance piece		C32197	1
13. Timing chain gear		C29330	1
14. Oil pump drive gear		C32185	1
15. Flywheel dowel		C6862	2
16. Flywheel bolt		C6839	10
17. Piston ring set	5.3 pre H.E.	R26136	1
	5.3 H.E	R40300	1
	6.0	JLM11043	12
18. Engine piston			
5.3 Pre H.E. models		18206	12
5.3 H.E. Compression ratio 12:5:1		21433	12
5.3 H.E. Compression ratio 11:5:1		21434	12
6.0 piston and liner		JLM11042	12
19. Connecting rod bolt		C43809	24
20. Small end bush		C29308	12
21. Connecting rod brgs	5.3	B12006SB	1
	6.0	please call	
22. Connecting rod nut		EAC5541	24
23. Oil level dipstick		C44151	1
24. Sump drain plug		C23435	1
25. Washer		C2296/1	1
26. Sump gasket		C29425	
27. Bottom pan gasket	pre H.E.	C29362	1
	H.E. & 6.0	EBC9623	1
28. Oil sump		EBC10651	1
29. Lower engine gasket set		EH831	1
30. Front engine mounting			
5.3 & 6.0 Coupe		MHC7522AA	2
6.0 Convertible		CBC5734	2
31. Spring seat rubber		CBC2517	1
32. Rear engine/gearbox mtg spring		C459021	1
33. Spring centre bush		CAC3227	1
34. Front crankshaft oil seal		JLM10613	1

5.3 & 6.0 Oil Pump

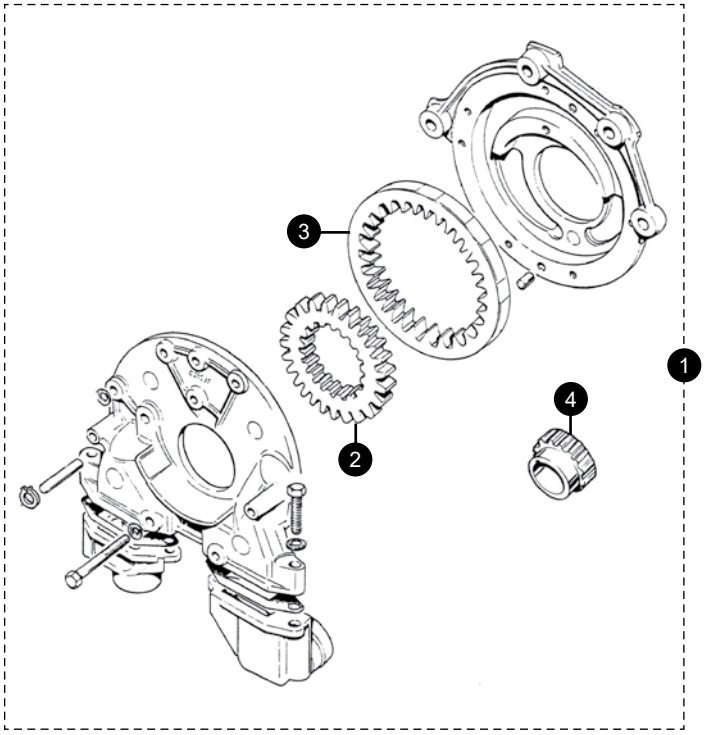

1. Oil pump*	EBC3163	1
Adaptor*	EBC4240	1

* Earlier pre H.E. engines will require EBC4240 adaptor to allow the fitment of the later style H.E. oil pump.

2. Oil pump gear (pre H.E. only)	C32184	1
3. Oil pump gear (pre H.E. only)	C31878	1
4. Oil pump drive gear on crank	C32185	1

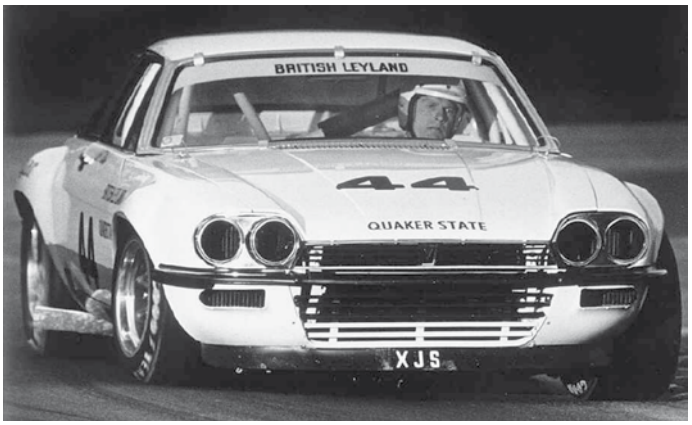

+44 1746 765432
sales.uk@sngbarratt.com
+33 385 201420
france@sngbarratt.com
018 01 833 833 (DE only)
sales.de@sngbarratt.com
+31 13 521 1552
sales.nl@sngbarratt.com
+1 800 452 4787
sales.usa@sngbarratt.com

5.3 & 6.0 Water Pump

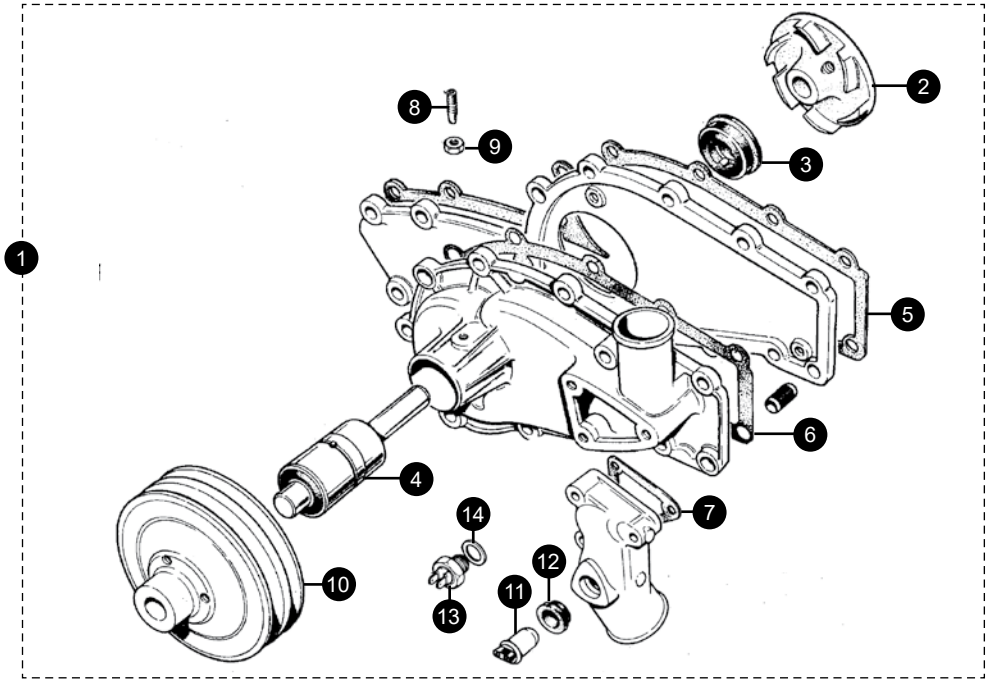

1. Water pump assembly			
5.3 Pre H.E.		**C34549**	**1**
5.3 H.E. & 6.0		**JLM10819**	**1**
2. Impellor			
5.3		**EAC3212**	**1**
3. Seal	**early**	**ADU6170**	**1**
	late	**EBC3131**	**1**
4. Bearing			
5.3		**NBC2209BA**	**1**

5. Waterpump gasket		**EBC9629**	**1**
6. Sandwich plate gasket		**C36542**	**1**
7. Joint housing gasket		**EBC9636**	**1**
8. Locating grub screw		**C23128**	**1**
9. Locknut		**NT609041**	**1**
10. Pulley			
5.3 Pre H.E. double pulley		**C38325**	**1**
5.3 H.E. & 6.0 single pulley		**C37817**	**1**
11. Fan thermo switch	**S1/2 push in**	**EAC1322**	**1**
12. Switch seal	**S1/2 push in**	**C37990**	**1**
11. Fan thermo switch	**S3 screw in**	**EAC2510**	**1**
12. Switch washer	**S3 screw in**	**C457593**	**1**

5.3 & 6.0 Oil Filter

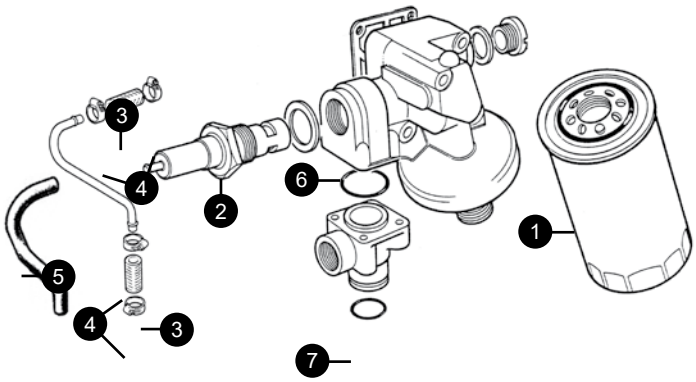

1. Oil filter	**EBC9658**	**1**
2. Oil pressure relief valve		
5.3 with relief oil flow oil cooling	**RTC1143**	**1**
5.3 & 6.0 with full flow oil cooling	**EAC7149**	**1**
3. Joining hose for oil vent pipe	**CAC586620**	**metre**
4. Hose clip	**JHC201901**	**4**
5. Oil vent hose		
6.0 with full flow oil cooling	**EBC3204**	**1**
6. O' ring	**EAC8101**	**1**
7. O' ring	**EAC8102**	**1**

Please turn to page 6 for a full range of Morris quality oils, fluids & consumables.

5.3 & 6.0 Cylinder Head

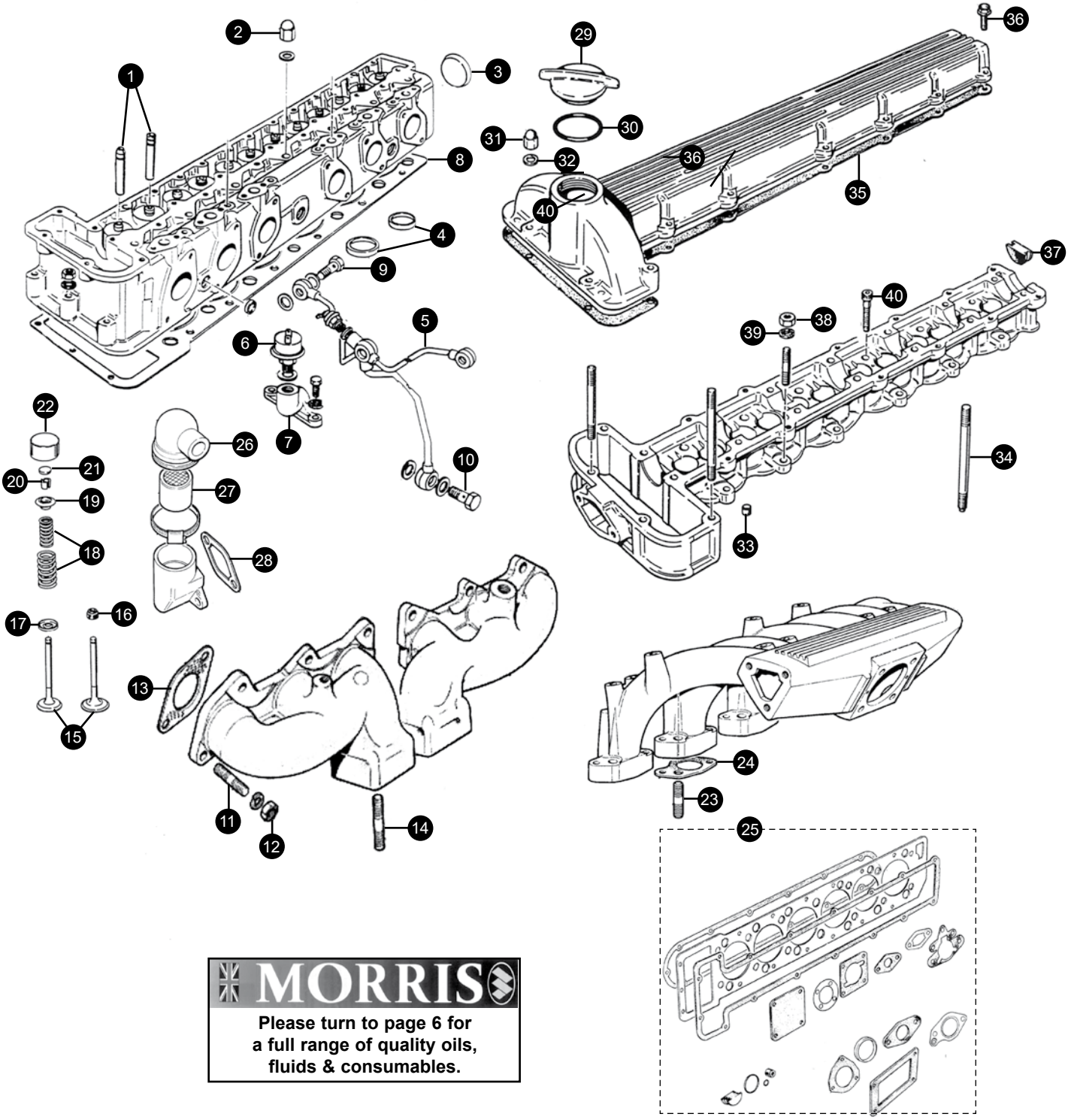

MORRIS

Please turn to page 6 for
a full range of quality oils,
fluids & consumables.

+44 1746 765432
sales.uk@sngbarratt.com

+33 385 201420
france@sngbarratt.com

018 01 833 833 (DE only)
sales.de@sngbarratt.com

+31 13 521 1552
sales.nl@sngbarratt.com

+1 800 452 4787
sales.usa@sngbarratt.com

1. Valve guide				
	Inlet	1st O/S	VAG50923	12
		2nd O/S	C29391	12
5.3 Pre H.E.	Exhaust	1st O/S	VAG50923	12
		2nd O/S	C29387	12
5.3 H.E. & 6.0	Exhaust	1st O/S	EAC3636	12
		2nd O/S	EAC3637	12
2. Chrome cylinder head nut			C37523*	28
3. Core plug			C168626	2
4. Valve seat insert				
5.3 Pre H.E.	Inlet		C29383	12
5.3 Pre H.E.	Exhaust		C29380	12
5.3 H.E.	Inlet		EAC3639	12
5.3 H.E.	Exhaust		EAC3641	12
6.0	Inlet		EAC3639	12
6.0	Exhaust		EBC3471	12
5. Oil feed pipe				
5.3			EBC3513	1
6.0			EBC8755	1
6. Oil pressure transmitter			C46272	1
7. Transmitter adaptor			C42072	1
8. Head gasket				
5.3 Pre H.E.	RH		C33135	1
	LH		C33136*	1
5.3 H.E. & 6.0	RH		NAB2540AA	1
	LH		NAB2541AA	1
9. Banjo bolt			C5846	2
Washer			C4146	4
10. Banjo bolt			C29652	2
Washer			C2296/3	4
11. Stud			C25321	22
			C20345	2
12. Nut			C30787	24
13. Gasket			C33921	12
14. Downpipe stud			EAC3823	16
Brass nut			C17916	16
Downpipe seal			EBC9388	4
15. Valve				
5.3 Pre H.E.	Inlet		EAC1549	12
5.3 Pre H.E.	Exhaust		EAC1550	12
5.3 H.E.	Inlet		EAC3191	12
5.3 H.E.	Exhaust		EAC3192	12
6.0	Inlet		NAB2533AA	12
6.0	Exhaust (sodium filled)		EAC7318	12
6.0	Exhaust (emission A)		EAC3192	12
16. Stem seal (set of 6)			HR299	4
17. Valve spring seat			C27481	24
18. Valve spring set			VSP94566P	3
19. Valve top collar				
Pre H.E			C27480	24
H.E	Inlet		C27480	12
H.E.	Exhaust		EAC7309	12
20. Valve cotter				
Pre H.E.			EBC2997	24prs
H.E.	Inlet		EBC2997	12prs
H.E.	Exhaust		EBC2998	12prs
21. Tappet shim	0.085”- 0.116”		C2243A to Z	A/R
22. Tappet	5.3		C44010	24
	6.0		NAC2543AA	24
23. Stud			TE108091J	24
24. Gasket			C43354	12
25. Head gasket set				
5.3 pre H.E.			CH832	1
5.3 H.E. & 6.0			DE880	1
Seal and O’ring set			12840	1
26. Rubber breather elbow				
5.3			C44386	1
6.0			EBC3985	1
27. Gauze filter			C44410	1
28. Gasket			C32366	1
29. Oil filler cap			EAC6523	1
30. Sealing ring			C42511	1
31. Chrome cam cover nut			C32524	8
32. Cam cover washer			FW105E	8
33. Dowel			EBC9705	4
34. Cylinder head studs			NAB2646BA	4
			C32680	12
			NAB2646AA	10
			NAB2646CA	4
			NAB2646DA	10
			C32679	12
35. Cam cover gasket				
	RH		EBC9627	1
	LH		EBC9628	1
36. Bolt			SN106251J	24
37. Cam cover bung			C30431	2
38. Nut			JLM9688	12
39. Washer			C300752	12
40. Bolt				
Pre H.E.			C29396	12
H.E.			SS108400J	12

5.3 & 6.0 Timing Gear

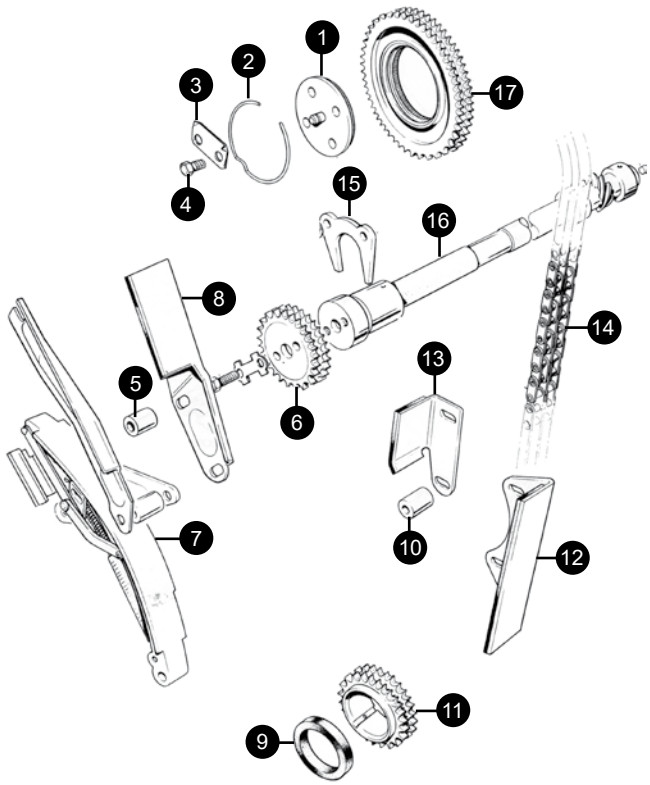

1. Cam gear coupling	C33889	2
2. Circlip	C30767	2
3. Locktab	C33917	4
4. Bolt	JZB100042	8
5. Spacer	C19129	1
6. Gear	C32227	1
7. Chain tensioner	C30485	1
8. Chain guide	C31068	1
9. Seal	C30002*	1
10. Spacer	C30493	1
11. Crank gear	C29330	1
12. Chain guide	C29635	1
13. Chain guide	C29636	1
14. Timing chain	C29590	1
15. Thrust plate	C29335	1
16. Auxiliary shaft	C38421	1
17. Camshaft sprocket	C29349	2

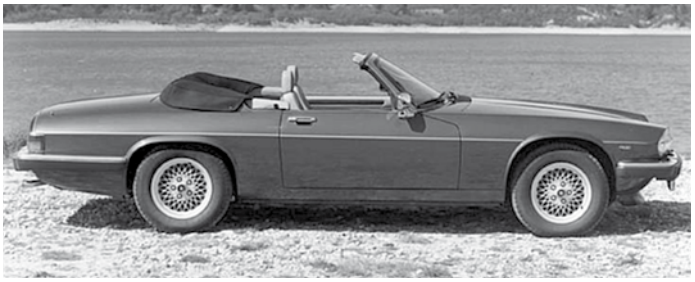

Oil Coolers

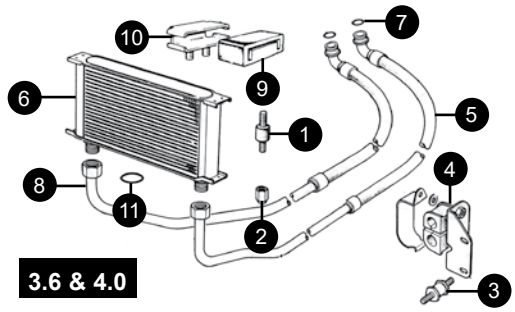

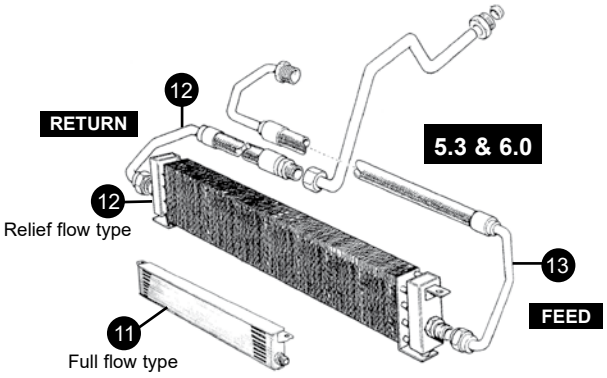

1. Mounting rubber (to VIN188414)	DAC6348	2
2. Mounting nut (to VIN188414)	DAC2667	4
3. Mounting (to VIN188414)	CAC8478	2
4. Insulating bush (to VIN188414)	CAC5537	1
5. Flexible hose		
to VIN 184573	CAC5804	1
VIN 184574 to 188104	CCC4891	1
VIN 188105 to 188414	CCC6913	1
VIN 188415 ON	CCC6913	1
6. Oil cooler		
to VIN 184573	CAC5261	1
VIN 184574 to 188104	CCC5359	1
VIN 188105 on	CCC6982	1
7. O'ring	CAC5118	2
8. Flexible hose		
to VIN 184573	CAC5805	1
VIN 184574 to 188104	CCC4892	1
VIN 188105 on	MHC7471AA	1
9. Rubber mounting	CAC8444	2
10. Mounting bracket	CAC8442	2
11. O ring	KRC1160	2

+44 1746 765432
sales.uk@sngbarratt.com
+33 385 201420
france@sngbarratt.com
018 01 833 833 (DE only)
sales.de@sngbarratt.com
+31 13 521 1552
sales.nl@sngbarratt.com
+1 800 452 4787
sales.usa@sngbarratt.com

12. Oil cooler		
Relief type	**C43923**	**1**
Full flow type	**CBC2692**	**1**
12. Flexible hose		
Relief type	**C38074**	**1**
Full flow type	**CBC2690**	**1**

13. Flexible hose		
Relief type	**C38075**	**1**
Full flow type	**CBC2691**	**1**

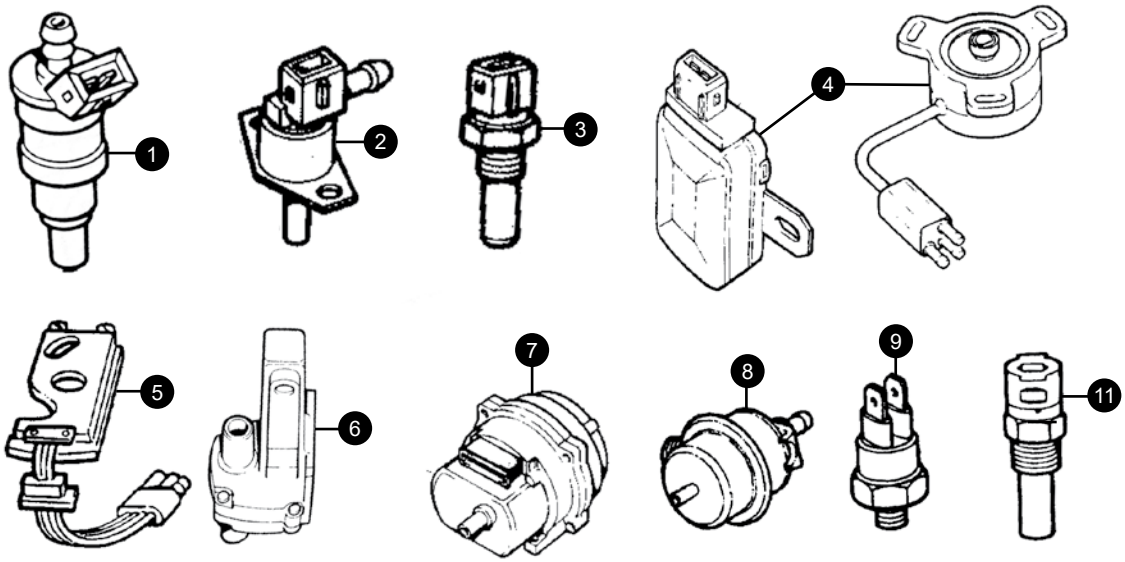

1. Fuel injector			
3.6		**EAC4867**	**6**
4.0		**DBC10423**	**6**
5.3 pre H.E.		**C45675**	**12**
5.3 H.E.	**4.5cm hose**	**EAC7874**	**12**
	9cm hose	**EAC7875**	**12**
6.0		**EBC2409**	**12**
2. Cold start injector			
5.3	**1979-85**	**EAC1383**	**2**
3. Water temperature sensor			
5.3		**DBC3728**	**1**
4. Throttle potentiometer			
5.3 early to eng 8S 61794		**EAC2670**	**1**
5.3 late eng 8S61795		**DAC7427**	**1**
6.0		**DBC2626**	**1**
5. Trigger board			
5.3 Pre H.E		**AEU1683**	**1**
6. Manifold pressure sensor			
5.3 1979-85	**Australia/ Canada/USA**	**C46172**	**1**
	All other countries	**C46171**	**1**
7. Pressure regulator			
4.0		**EBC2606**	**1**
5.3 early		**EAC1284**	**1**
5.3 late		**EAC4864**	**1**
8. Extra air valv			
5.3 1979-85		**EAC2273**	**1**
5.3 1979-85	**USA H.E.**	**EAC4438**	**1**
9. Thermo time switch		**EAC1385**	**1**

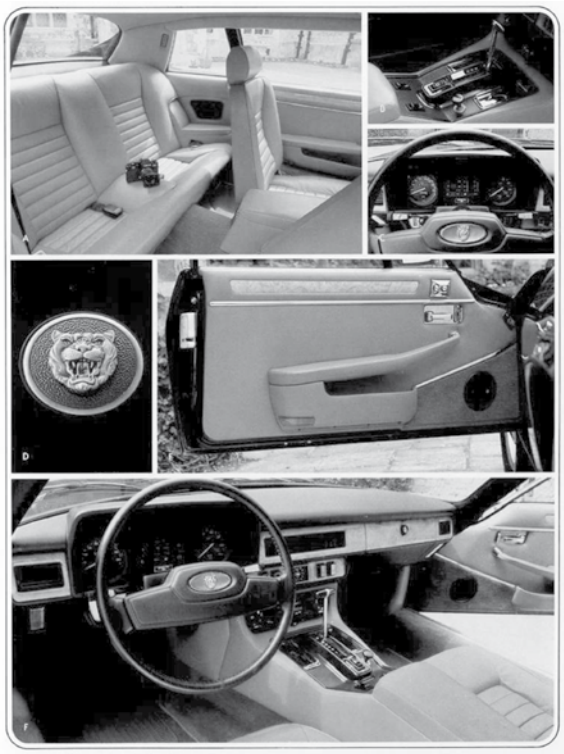

Quick Reference Service Spares

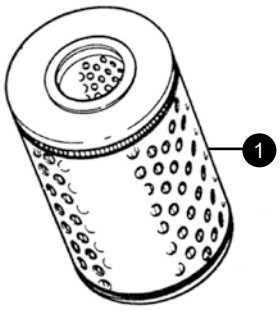

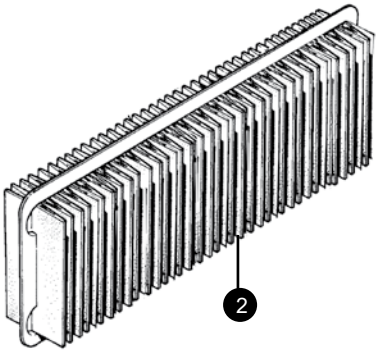

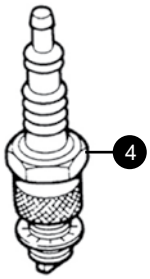

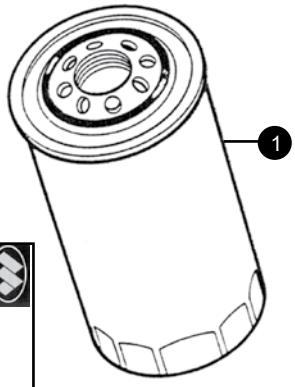

MORRIS

Please turn to page 6 for a full range of quality oils, fluids & consumables.

	1. Oil filter	2. Air filter	3. Fuel filter	4. Spark plugs
3.6	EBC9658 x 1	EAC1828 (flat) EAC4840 (round)	EAC3112	EBC11480 x 6
4.0	EBC9658 x 1	EAC9828	C2C35417	EBC11480 x 6 EBC8143 x 6 (AJ16 emission A)
5.3 Pre H.E.	JLM9547 x 1 (very early paper) EBC9658 x 1 (later spin off)	EAC1828 x 2	EAC1498	EAC8915 x 12
5.3 H.E.	EBC9658 x 1	EAC1828 x 2	EAC3112 (early push fit) C2C35417 (later screw fit)	EBC4021 x 12 NAB3580DA x 12 (Emission A)
6.0	EBC9658 x 1	EBC1084 x 2	C2C35417	EBC4021 x 12 NAB3580DA x 12 (Emission A) SPE1007 x 12 XJRS JaguarSport

+44 1746 765432
sales.uk@sngbarratt.com
+33 385 201420
france@sngbarratt.com
018 01 833 833 (DE only)
sales.de@sngbarratt.com
+31 13 521 1552
sales.nl@sngbarratt.com
+1 800 452 4787
sales.usa@sngbarratt.com

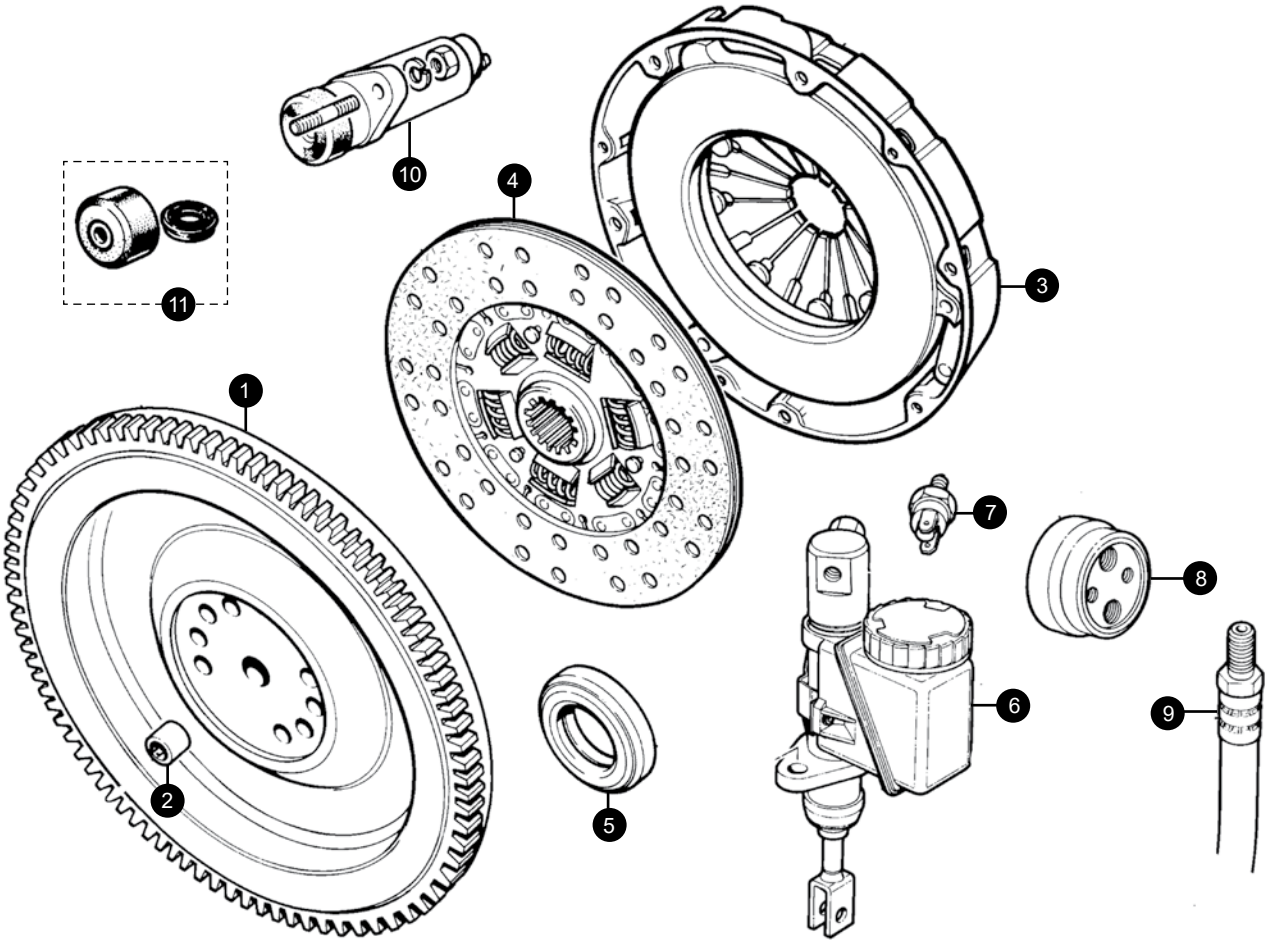

1. Flywheel			
3.6		**EBC1832**	**1**
4.0		**EBC3114**	**1**
2. Spigot bearing		**UKC8154J**	**1**
3. Clutch cover			
3.6		**EAC9985**	**1**
4.0		**EBC3115**	**1**
4. Clutch plate			
3.6		**EBC4132**	**1**
4.0		**EBC3856**	**1**
5. Release bearing		**JLM9626**	**1**
6. Clutch master cylinder			
3.6	**to VIN 148944**	**CAC8091**	**1**
	VIN 148945 on	**CBC6377**	**1**
4.0	**to VIN 188247**	**CBC6377**	**1**
	VIN 188248 on	**CBC9742**	**1**
7. Clutch switch			
3.6 models only		**DAC3719**	**1**
8. Clutch fluid damper		**AAU8008**	**1**
9. Flexible hose			
3.6		**CAC7876**	**1**
4.0	**to VIN 188247**	**CAC7876**	**1**
	VIN 188248 on	**CBC6377**	**1**
10. Slave cylinder			
3.6		**EAC7651**	**1**
4.0	**to VIN 188247**	**EAC7651**	**1**
	VIN 188248 on	**CBC9716**	**1**
11. Slave cylinder repair kit		**BAU4781A**	**1**

Manual Gearbox

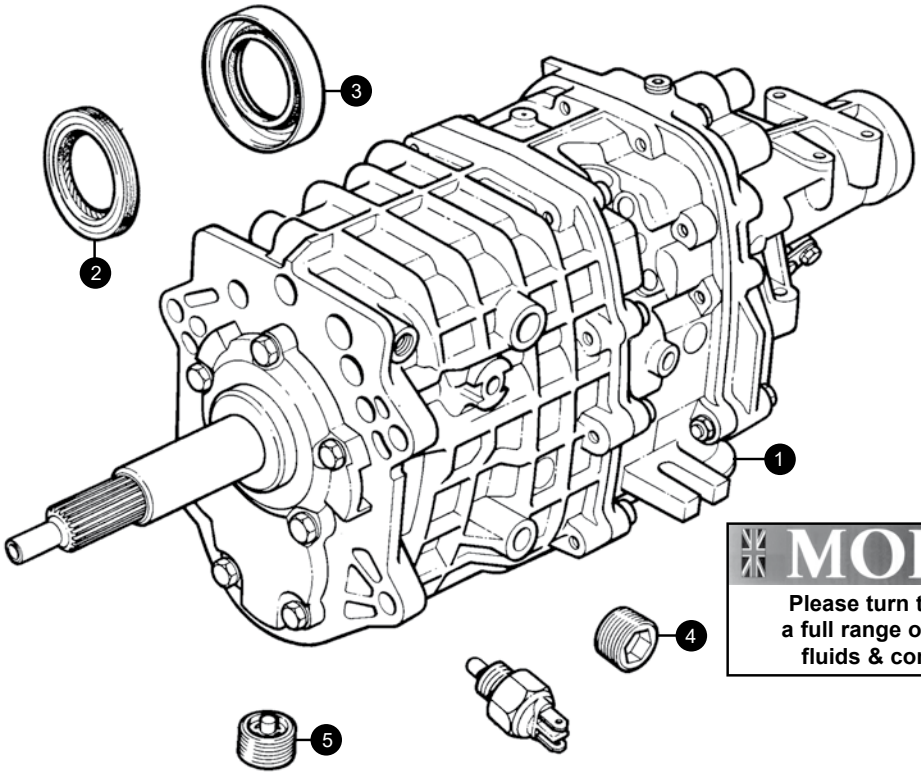

Please turn to page 6 for a full range of quality oils, fluids & consumables.

1. Manual gearbox assembly			
3.6	**non speed sensor**	**EAC8195**	**1**
	speed sensor	**EBC3283E**	**1**
4.0		**EBC11305E**	**1**
2. Front oil seal			
3.6	**27mm inside diameter**	**JLM10396**	**1**
	35mm inside diameter	**JLM1181**	**1**
4.0		**JLM1181**	**1**

3. Rear oil seal		**AEU4006**	**1**
4. Filler plug		**JLM1180**	**1**
5. Drain plug		**JLM1182**	**1**
6. Reverse light switch			
3.6		**DAC3476**	**1**
4.0	**to VIN 194774**	**DBC6754**	**1**
	VIN 194775 on	**LHE6590AA**	**1**

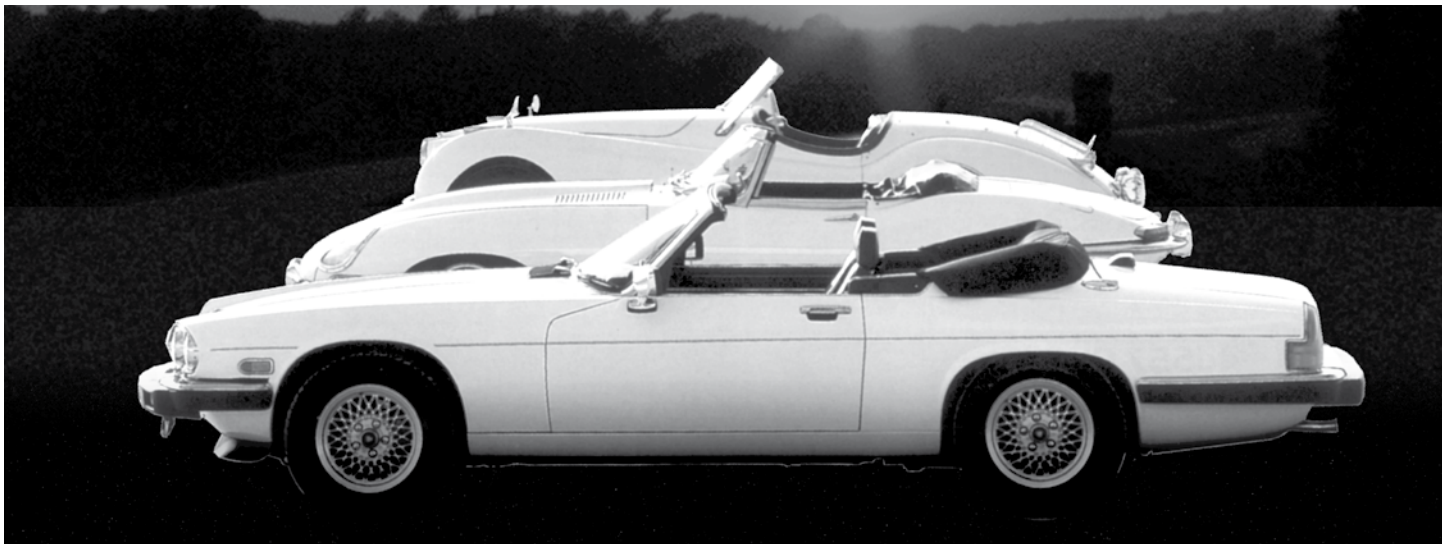

+44 1746 765432
sales.uk@sngbarratt.com
+33 385 201420
france@sngbarratt.com
018 01 833 833 (DE only)
sales.de@sngbarratt.com
+31 13 521 1552
sales.nl@sngbarratt.com
+1 800 452 4787
sales.usa@sngbarratt.com

MORRIS

Please turn to page 6 for a full range of quality oils, fluids & consumables.

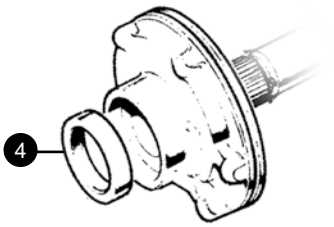

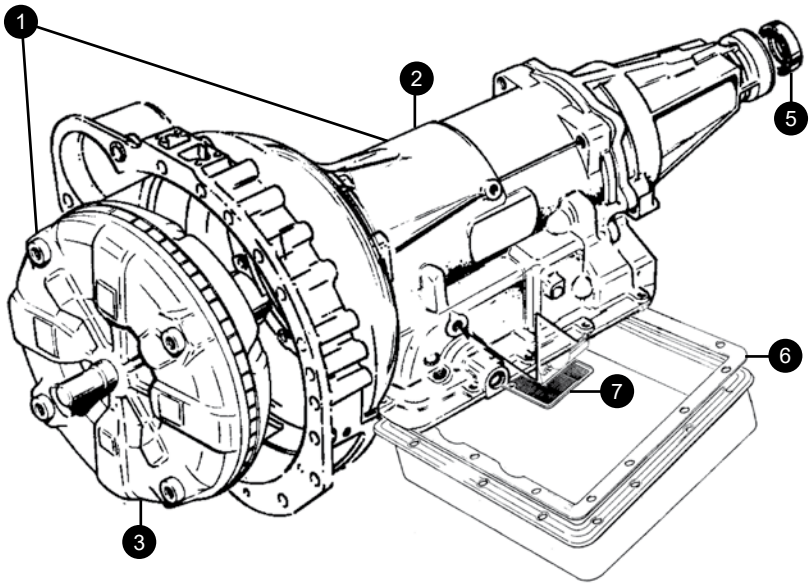

1. Gearbox & torque converter			
5.3 GM400		400GBTC	1
2. Gearbox only			
3.6	to VIN 157115	EBC2195E	1
	VIN 157116 on	EBC2911E	1
4.0	VIN 188105 to 194774	EBC9743E	1
	VIN 194775 to 225437	NHE4400BBE	1
6.0	TO VIN 197580	EBC11138E	1
	VIN 197581 on	NNA4400BAE	1
3. Torque converter			
3.6		EAC6923N	1
4.0	to VIN 194774	EBC2378	1
	VIN 194775 on	EBC8181	1
5.3		400TC	1
6.0		EBC11181E	1
4. Front oil seal			
3.6/4.0		JLM10856	1
5.3		AEU1065	1
6.0		JLM10974	1
5. Rear oil seal			
5.3		JLM347	1
6.0		JLM10961	1
6. Sump gasket			
3.6/4.0		JLM12343	1
5.3		JLM1487	1
6.0		JLM10975	1
7. Sump filter			
3.6		JLM664	1
4.0		JLM2128	1
5.3		AAU6690	1
6.0		JLM10952	1

Gearbox overhaul kit		
5.3	400OK	1
Gearbox master overhaul kit (includes clutches)		
5.3	400MOK	1
Gearbox gasket set		
6.0	JLM11942	1

Many other parts are available so please contact us if what you need isn't listed...

Propshaft

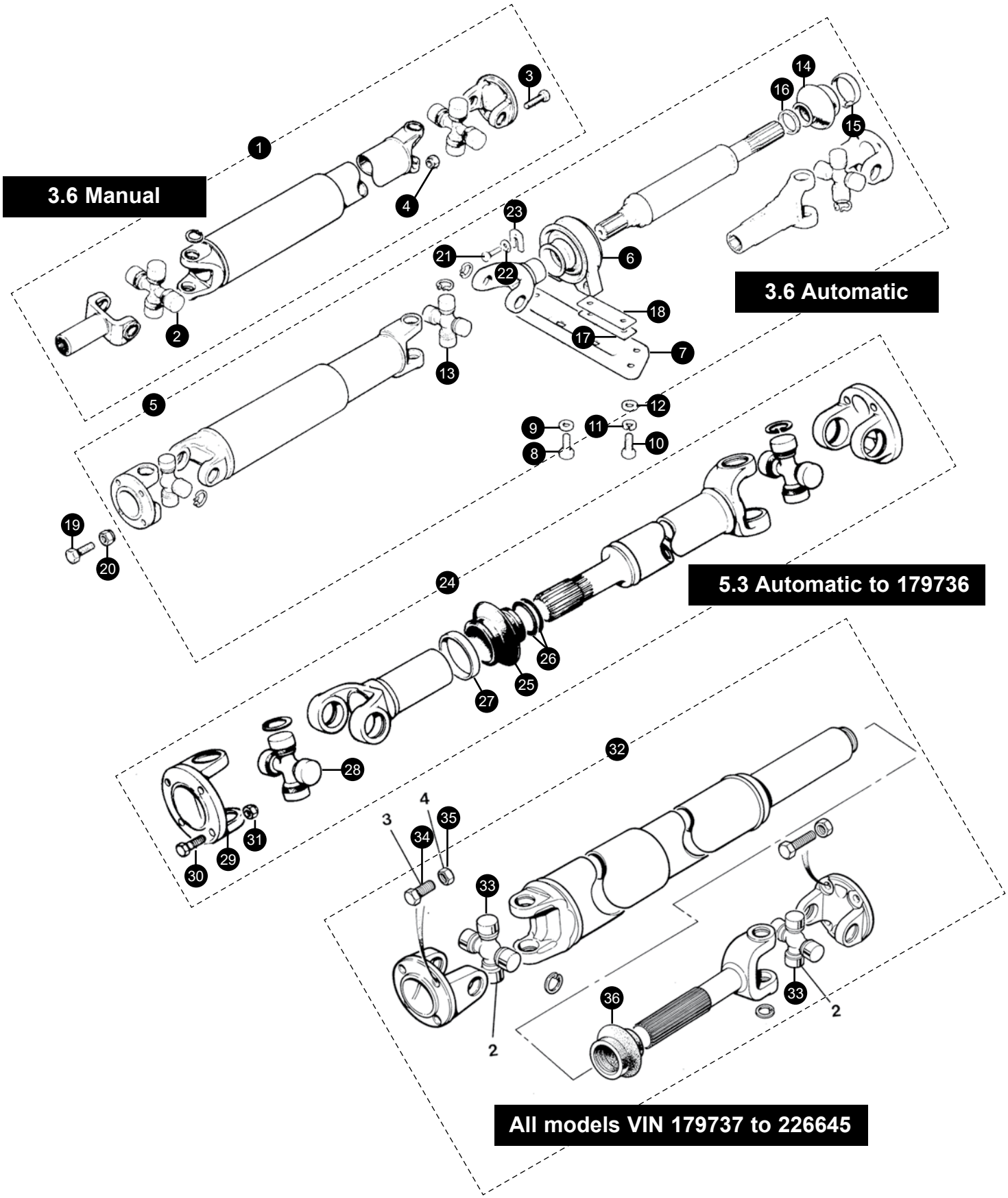

+44 1746 765432
sales.uk@sngbarratt.com

+33 385 201420
france@sngbarratt.com

018 01 833 833 (DE only)
sales.de@sngbarratt.com

+31 13 521 1552
sales.nl@sngbarratt.com

+1 800 452 4787
sales.usa@sngbarratt.com

Manual 3.6 Models

1. Propshaft assembly	CAC4560/2	1
2. Universal joint	JLM823	2
3. Drive flange bolt	C19827	4
4. Locking nut	NZ606041J	4

Automatic 3.6 Models

5. Propshaft assembly	CBC1995	1
6. Centre bearing	EBC9040	1
7. Centre bearing mtg bracket	CBC5432	1
8. Set screw	SH605111	2
9. Plain washer	FW205T	2
10. Set screw	SH605081J	4
11. Locking washer	WM108001 J	4
12. Plain washer	WA108051J	4
13. Universal joint	JLM823	3
14. Gaiter	JLM1543	1
15. Large clip	JLM1544	1
16. Small clip	JLM1545	1
17. Packing piece	C28654	A/R
18. Packing piece	C286541	A/R
19. Bolt	C19827	8
20. Locking nut	NZ606041J	8
21. Bolt	RTC1335J	1
22. Tab washer	RTC1336J	1
23. 'U' shaped spacer	RTC1337J	1

Automatic 5.3 Models

24. Propshaft assembly		
Up to (C) 2W2832 (RHD) and 2W53506(LHD)	CAC2191/2	1
From (C) 2W2833 (RHD) and 2W53507(LHD)	NAB5800FA	1
25. Gaiter	JLM1543	1
26. Ring	9412	2
27. Clip	9413	1
28. Universal joint	JLM823	2
29. Drive flange	600656	2
30. Bolt	C19827	8
31. Locking nut	NZ606041J	8

All models VIN 179737 to 226645

32. Propshaft assembly			
5.3		NAB5800FA	1
4.0 Manual	to VIN 185819	EBC8501	1
	VIN 185820 on	NHF5800DB	1
4.0 Auto		NHF5800CB	1
6.0		NHF5800CB	1
33. Universal joint	5.3	JLM823	2
	4.0	JLM269	2
	6.0	JLM11718	2
34. Bolt		C19827	8
35. Locking nut		NZ606041J	8
36. Gaiter (5.3 models only)		JLM1543	1
Gaiter clip		JLM1544	1
Gaiter clip rubber		JLM1545	1

Differential

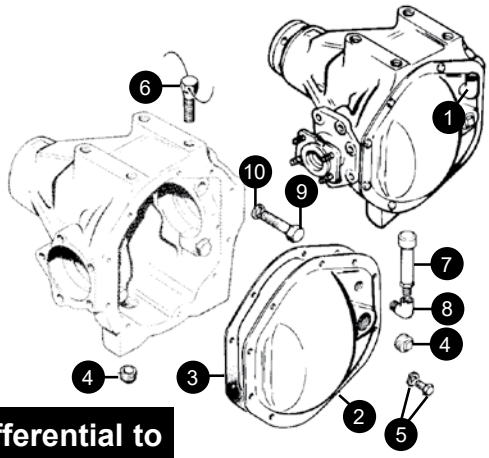

GKN Differential to VIN 139051

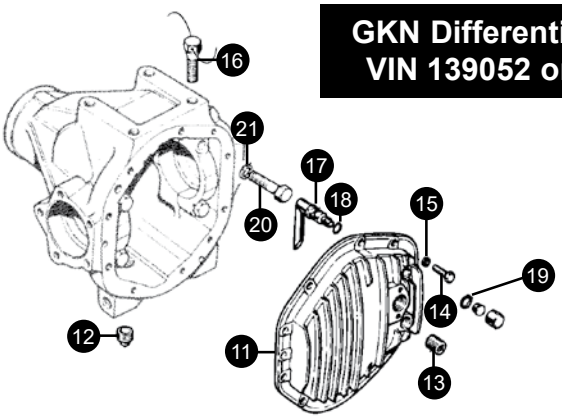

GKN Differential VIN 139052 on

Dana Differential

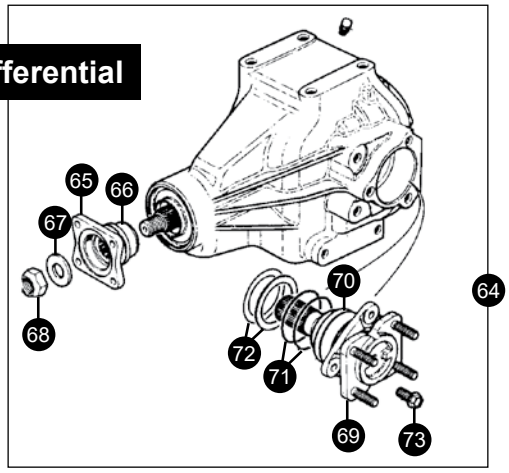

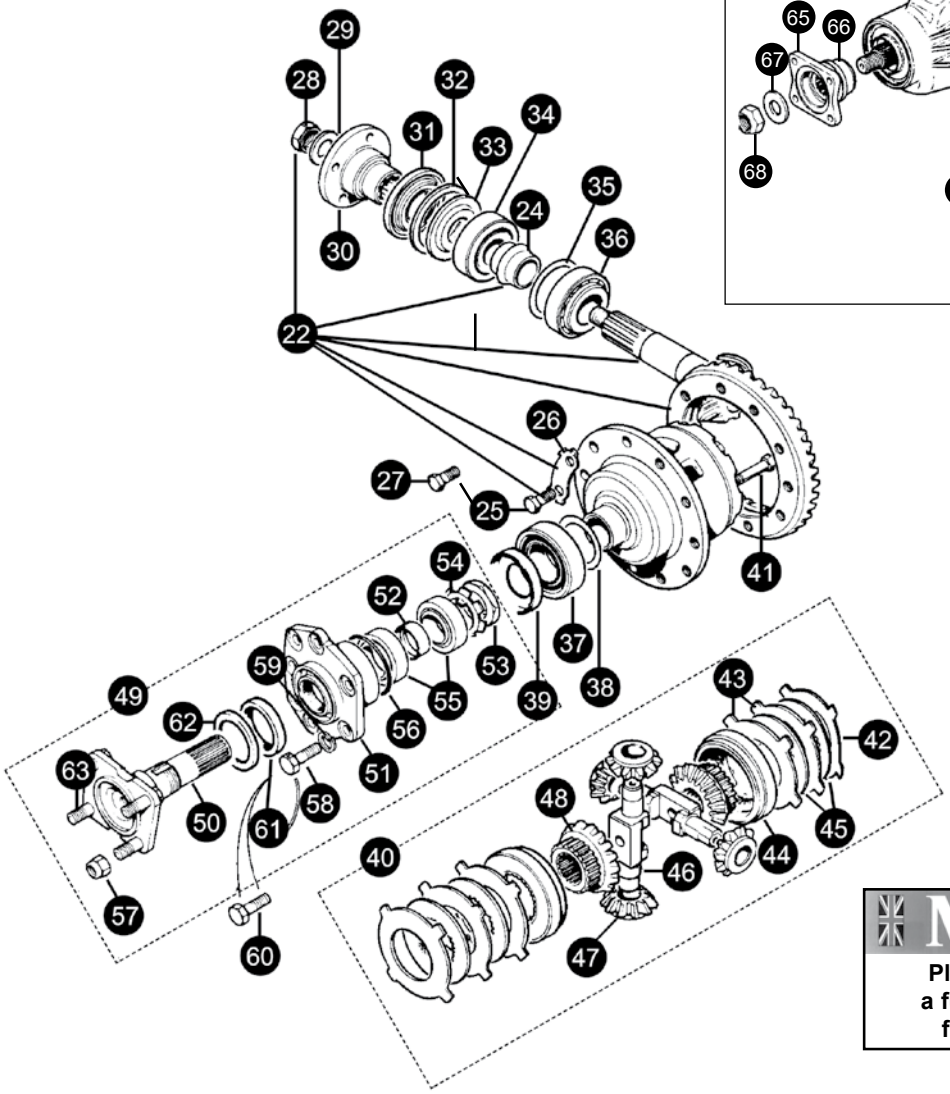

MORRIS

Please turn to page 6 for a full range of quality oils, fluids & consumables.

+44 1746 765432
sales.uk@sngbarratt.com

+33 385 201420
france@sngbarratt.com

018 01 833 833 (DE only)
sales.de@sngbarratt.com

+31 13 521 1552
sales.nl@sngbarratt.com

+1 800 452 4787
sales.usa@sngbarratt.com

1. 3.6 Differential assembly		
3.54:1 ratio up to VIN 139052 to 167221		
	CBC1957/35	**1**
3.54:1 ratio up to VIN 167222 to 179736		
	EBC9429/35	**1**
VIN 179737 to 222849	**JLM1368**	**1**
4.0 Differential assembly		
3.54:1 ratio to VIN 188104	**EBC109122**	**1**
3.54:1 ratio VIN 188104 to 222849	**NHF5700AA1**	**1**
VIN 222850 on	**JLM12438E**	**1**
5.3 Differential assembly		
3.31:1 ratio up to VIN 105047	**CAC2022**	**1**
3.07:1 ratio up to VIN 105047	**CBC2259/6**	**1**
2.88:1 ratio VIN 105048 to 167221	**CBC1957/28**	**1**
2.88:1 ratio VIN 167222 to 185819	**EBC942928**	**1**
2.88:1 ratio VIN 185820 on	**EBC109121**	**1**
VIN 179737 on	**JLM1368**	**1**
6.0 Differential assembly		
3.54:1 ratio to VIN 222849	**NHF5700AA1**	**1**
VIN 222850 on	**JLM12438E**	
<u>Breather and cover plate to VIN139051</u>		
2. Cover plate	**8507**	**1**
3. Gasket	**3931**	**1**
4. Plug	**607172J**	**2**
5. Bolt	**AEU1188**	**10**
6. Mounting bolt	**JZS100090**	**4**
7. Breather	**C25716**	**1**
8. Elbow	**8509**	**1**
9. Screw	**6114**	**4**
10. Lockwasher	**JLM1349**	**4**
<u>Breather and cover plate from VIN139052</u>		
11. Rear cover	**JLM1351**	**1**
12. Drain plug	**JLM1263**	**1**
13. Filler plug	**JLM632**	**1**
14. Bolt	**JLM1348**	**10**
15. Locking washer	**JLM613**	**10**
16. Bolt	**JZS100090**	**4**
17. Breather	**JLM631**	**1**
18. Breather 'O' ring	**JLM620**	**1**
19. Circlip	**JLM1710**	**1**
20. Retaining screw	**6114**	**4**
21. Locking washer	**JLM1349**	**4**
22. Crown wheel and pinion		
<u>3.6 models</u>		
3.54:1 ratio	**124581**	**1**
<u>4.0 models</u>		
3.54:1 ratio to VIN 222849	**124581**	**1**
3.54:1 ratio VIN 22250 on	**JLM12439**	**1**
<u>5.3 models</u>		
3.31:1 ratio up to VIN 105047	**12457/1**	**1**
3.07:1 ratio up to VIN 105047	**JLM560**	**1**
2.88:1 ratio from VIN 105048 to 139051	**JLM326/2**	**1**
2.88:1 ratio from VIN 139052	**JLM635**	**1**
<u>6.0 models</u>		
3.54:1 ratio to VIN 222849	**124581**	**1**
3.54:1 ratio VIN 22250 on	**JLM12439**	**1**
24. Collapsible spacer	**12456**	**1**
25. Bolt to VIN139051	**BAU4604J**	**10**
26. Lock tab VIN139052 on (not 6.0)	**6316**	**5**
27. Bolt	**BAU4604J**	**5**
28. Nut	**11099**	**1**
29. Washer	**WA120000J**	**1**
30. Drive flange	**RTC1009A**	**1**
31.Pinion oil seal	**CBC6923**	**1**
32. Pinion gasket to VIN 139051	**607183J**	**1**
33. Pinion spacer	**JLM614**	**1**
34. Outer pinion bearing	**ATA7166**	**1**
35. Pinion bearing shim to VIN 139051		
0.003"	**3860**	
0.005"	**3861**	
0.010"	**3862**	
Pinion bearing shim VIN 139052 on		
0.508mm	**JLM1262A**	**2**
0.533mm	**JLM1262B**	**2**
0.559mm	**JLM1262C**	**2**
0.584mm	**JLM1262D**	**2**
0.609mm	**JLM1262E**	**2**
0.635mm	**JLM1262F**	**2**
0.660mm	**JLM1262G**	**2**
0.686mm	**JLM1262H**	**2**
0.711mm	**JLM1262I**	**2**
0.737mm	**JLM1262J**	**2**
0.762mm	**JLM1262K**	**2**
0.787mm	**JLM1262L**	**2**
0.813mm	**JLM1262M**	**2**
0.838mm	**JLM1262N**	**2**
0.864mm	**JLM12620**	**2**
0.889mm	**JLM1262P**	**2**
36. Inner pinion bearing	**12252**	**1**
37. Differential bearing	**3845**	**2**
38. Differential bearing shim to VIN 139051		
0.003"	**3935**	**2**
0.005"	**3936**	**2**
0.010"	**3937**	**2**
0.030"	**3938**	**2**
Differential bearing shim VIN 139052 on		
0.028mm	**JLM563A**	**2**
0.030mm	**JLM563B**	**2**
0.031mm	**JLM563C**	**2**
0.032mm	**JLM563D**	**2**
0.033mm	**JLM563JE**	**2**
0.034mm	**JLM563F**	**2**
0.035mm	**JLM563G**	**2**
0.036mm	**JLM563H**	**2**
0.037mm	**JLM563JI**	**2**
0.038mm	**JLM563J**	**2**
0.039mm	**JLM563JK**	**2**

Differential

0.040mm	JLM563L	2
0.045mm	JLM563JM	2
39. Baffle	JLM1703	1
40. Differential gearing assembly		
to VIN 139051	AEU1935	1
VIN 139052 on	JLM1352	1
41. Bolt	7680	8
42. Belleville friction plate	RTC1350A	2
43. Tagged friction plate	RTC1349A	4
44. Ring gear	11290	2
45. Plate clutch	RTC1416A	4
46. Cross shaft	7686	2
47. Pinion gear	7685	4
48. Side gear	11291	2
49. Complete shaft assembly		
RH	JLM558	1
LH	JLM559	1
50. Shaft assembly	JLM557	2
51. Bearing housing		
RH	AEU1386	1
LH	AEU1387	1
52. Collapsible spacer	RTC1348	2
53. Shaft nut	RTC1346	2
54. Tab washer	JLM556	2
55. Axle shaft bearing	CAC4999	4
56. 'O' ring	RTC1340	2
57. Nut	NV607041j	8
58. Caliper mtg bolt to VIN 139051	12268	10
59. Locking washer to VIN 139051	12270	10
60. Caliper mtg bolt VIN 139052 on	JLM1345	10
61. Oil seal	JLM1264	2
62. Oil thrower	AEU1385	2
63. Bolt	JLM442	8

Dana limited slip differential (vin 105048 on)

64. Differential assembly	EBC109121E	1
65. Input flange	JLM340	1
66. Bearing pinion	JLM282	1
Outer pinion bearing shim		
0.003"	JLM286	A/R
0.005"	JLM287	A/R
0.010"	JLM288	A/R
0.020"	JLM289	A/R
Inner pinion bearing	JLM281	1
Inner pinion bearing shim		
0.005"	JLM283	1
0.010"	JLM284	1
0.020"	JLM285	1
Pinion oil seal	JLM337	1
67. Special washer	JLM339	1
68. Drive flange nut	JLM338	1
69. Output shaft assembly	JLM313	2
70. Output shaft bearing	JLM290	2
Bearing retainer	JLM291	2
71. Sealing ring	JLM292	4
72. Bearing shim		
0.003"	JLM443	1
0.005"	JLM444	1
0.010"	JLM445	1
0.030"	JLM446	1
73. Set screw	JLM408	6
74. Breather	JLM829	1
Oil slinger	JLM336	1

+44 1746 765432
sales.uk@sngbarratt.com
+33 385 201420
france@sngbarratt.com
018 01 833 833 (DE only)
sales.de@sngbarratt.com
+31 13 521 1552
sales.nl@sngbarratt.com
+1 800 452 4787
sales.usa@sngbarratt.com

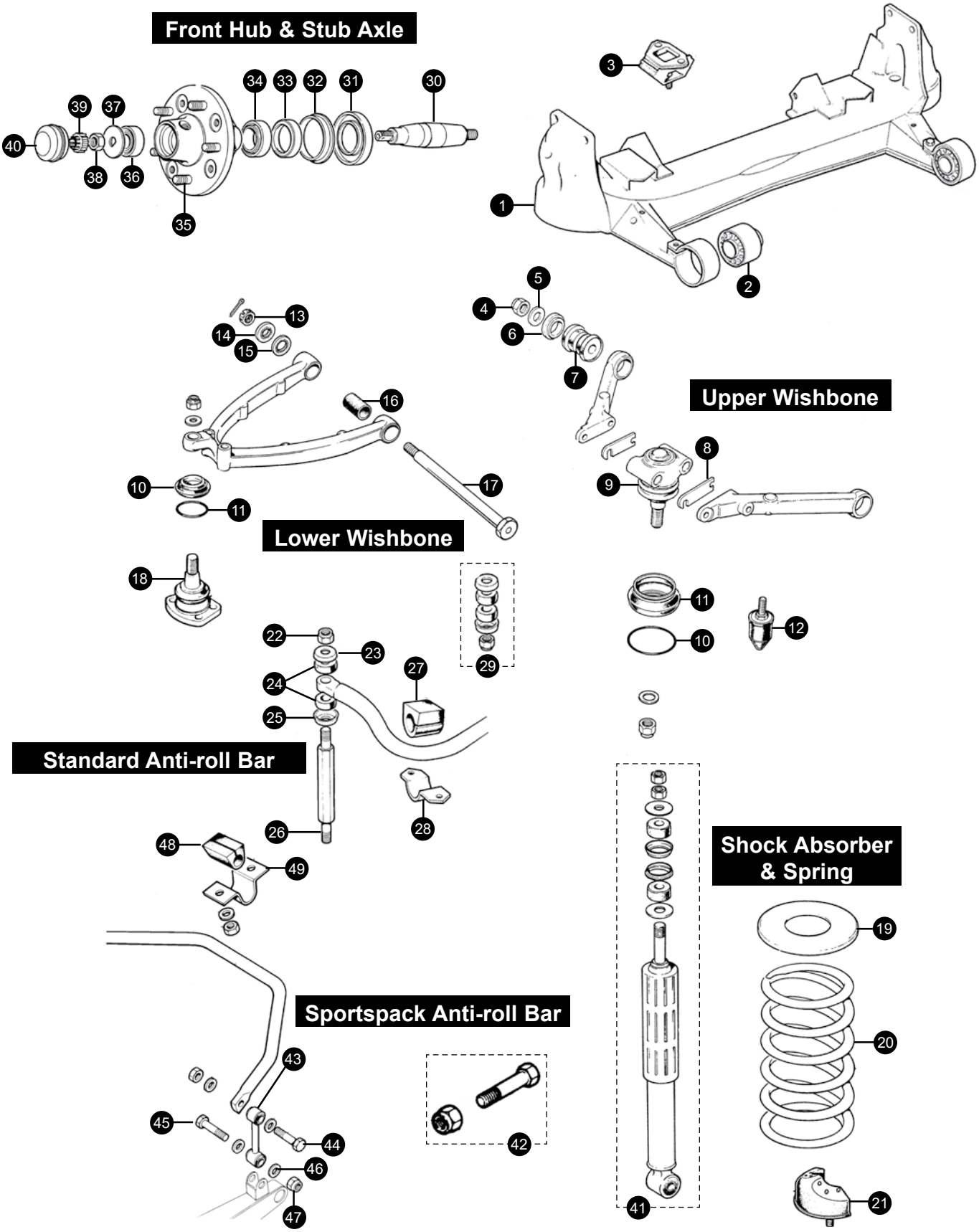
Front Hub & Stub Axle
Upper Wishbone
Lower Wishbone
Standard Anti-roll Bar
Shock Absorber & Spring
Sportspack Anti-roll Bar

Front Suspension

1. Front suspension crossmember		MHC2244AA	1
2. Front suspension front mtg bush			
Coupe		MHC2370AA	2
Convertible		CBC5736	2
3. Front suspension rear "V" mtg		CBC5735	2
4. Nut		C87375	4
5. Washer		C30993	4
6. Washer		C29975	8
7. Upper wishbone bush	standard	CAC9295	4
	uprated	CBC5523U	4
8. Shim	thick	CBC64161	8
	thin	CBC64162	8
9. Upper ball joint		CAC9938	2
10. Gaiter retaining band		C22969*	4
11. Ball joint gaiter	clear	C43216	4
	black	C43216BLK	4
12. Upper bump stop		C29979	4
13. Nut		NL609041J	2
14. Washer		C30955	2
15. Washer		C30954	4
16. Lower wishbone bush	standard	C8673	4
	uprated	C8673U	4
17. Lower fulcrum pin		C30722	2
18. Lower ball joint		JLM11860	2
19. Packing ring	0.125"	C41271	A/R
20. Front road spring			
3.6 to VIN 144699		C32130	2
3.6 VIN 144700 on		JLM1424	1 kit
4.0 to 188104 Coupe – non sportspack		JLM10920	1
Coupe – Sportpack		JLM1424	1
Convertible		JLM11258	1
4.0 from 188105 Coupe		JLM11310	1
Convertible – USA/Canada spec		JLM11258	1
Convertible – Non USA/Canada spec		JLM10920	1
5.3 coupe (non sportspack)		RTC2751	1
5.3 Sportspack		JLM1718	1
5.3 Convertible		RTC2752*	1
6.0 without sportspack		RTC2751	1
6.0 sportpack		JLM11309	1
21. Lower bump stop		CCC3927	2
<u>Standard anti-roll bar</u>			
22. Nut*		NZ 606041J	4
23. Washer*		C11045	4
24. Bush*	standard	C10996	8
	uprated	C10996U	8
25. Washer*		CCC6967	4
*All included in kit		JLM11906	2
26. Anti roll bar link		C46186	2

27. Anti roll bar mounting bush			
3.6 & 5.3 to 1987 (no spot)		C32925	2
3.6 & 5.3 1987 on (white spot)		CAC4561/7	2
5.3 Sportspack (yellow spot)		CBC5580	2
Blue spot		CAC46516	2
28. Anti roll bar support bracket			
to VIN 139051	RH	C30500	1
	LH	C30501	1
Keeper plate for	RH	C30571	1
C30500 & 01	LH	C30570	1
VIN 139052 on	RH	CBC5336	1
	LH	CBC5337	1
29. Anti roll bar link bush and washer set			
Includes 27,28,29 & 30		JLM11906*	2
30. Stub axle			
Early to 2W2573 RHD/2W53169 LHD		C27787	2
Late 2W2574 RHD/2W53170 LHD on		CCC5136	2
31. Water deflector on stub		C18843	2
32. Water deflector on hub		C18842	2
33. Hub oil seal			
Early to 2W2573 RHD/2W53169 LHD		C15350	2
Late 2W2574 RHD/2W53170 LHD on		C45711	2
Later 1991 on cars with ABS		CBC2858	2
34. Inner wheel bearing			
Early to 2W2573 RHD/2W53169 LHD		C15351	2
Late 2W2574 RHD/2W53170 LHD on		C45709	2
35. Wheel stud		C27779	10
36. Outer wheel bearing			
Early to 2W2573 RHD/2W53169 LHD		C15352	2
Late 2W2574 RHD/2W53170 LHD on		C45710	2
Front wheel bearing kit			
Early to 2W2573 RHD/2W53169 LHD		JLM257	2
Late 2W2574 RHD/2W53170 LHD on		JLM258	2
Later 1991 on cars with ABS		JLM10848	2
37. D shaped washer			
Early to 2W2573 RHD/2W53169 LHD		C3400	2
Late 2W2574 RHD/2W53170 LHD on		C45724	2
38. Nut			
Early to 2W2573 RHD/2W53169 LHD		NL609041J	2
Late 2W2574 RHD/2W53170 LHD on		NT610041J	2
39. Lock nut			
Late 2W2574 RHD/2W53170 LHD on		C45726	2
40. Grease cap			
to VIN 148489		CBC6766	2
VIN 148490 on		CBC6766	2

41. Shock absorber		
Standard Non Sportspack	**CAC9089**	**2**
3.6 Sportspack	**CBC7830**	**2**
<u>4.0 non sportspack</u>		
Up to 188104	**CBC7830**	**2**
From 188105 to 192350	**CBC9089**	**2**
From 192350	**MHD2140AA**	**2**
<u>4.0 sportspack</u>		
All	**CCC7474**	**2**
5.3 Non Sportspack	**CAC9089**	**2**
Sportspack	**CBC6559**	**2**
<u>6.0 non Sportspack</u>		
Up to 192350	**CAC9089**	**2**
From 192350	**MHD2140AA**	**2**
<u>6.0 Sportspack</u>		
All	**CCC7474**	**2**
Koni 3.6	**80-2093**	**2**
Koni 5.3	**26-1089**	**2**
42. Nuts & bolts		
Bolt through front mounting bush	**RTC2584**	**2**
Nut for bolt through front mounting bush	**252176J**	**2**
V mounting attachment bolt	**SH606091J**	**4**
Nut for stud on V mounting	**NY606041J**	**2**
ARB bush keep plate bolt	**JLM9676**	**4**
ARB bush keep plate bolt- nut	**NZ606041J**	**4**
Bottom ball joint cap to housing bolt	**C15344**	**8**
Stub axle shaft inner nut	**C87377**	**2**
Lower shock absorber bolt	**C22827**	**2**
Lower shock absorber bolt- nut	**NY607041J**	**2**
Upper ball joint nut	**NY608041J**	**2**
Bolt though upper ball joint–short–to 187970	**CBC7371**	**2**
Bolt though upper ball joint–short–from 187970	**CBC7371**	**2**
Bolt though upper ball joint-long	**BH606321J**	**2**
Lower ball joint nut	**NZ609041J**	**2**
Special bolt to fit lower b/jnt	**CBC1805**	**8**
Bolt through upper ball joint- short	**C29890**	**2**
Bolt through upper ball joint- long	**BH606321J**	**2**
Bolt through upper ball joint- nut	**NY606041J**	**4**
Pinch bolt for subframe front bush	**SH608101**	**2**
Bolt through fnt subframe eye bush	**RTC2584**	**2**
Vee mounting attachment bolt	**SH605081**	**4**
Vee mounting stud- nut	**NY606041J**	**2**
Nut for bottom bumpstop	**JLM9684**	**4**
Spring pan to lower wishbone bolt	**SH606061J**	**8**
Spring pan to shocker lwr bkt bolt	**BH606261J**	**4**
Spring pan to shocker lwr bkt bolt- nut	**NY606041J**	**4**

<u>Sportspack anti-roll bar</u>

43. Anti roll bar link assembly (complete with bushes)	**C42907**	**2**
44. Bolt through top eye of link	**C43807**	**2**
45. Bolt through lower eye of link	**BH607161J**	**2**
46. Washers	**WA600071J**	**8**
47. Locknut on bolts	**TN3210J**	**4**
48. Anti roll bar mounting bush	**CBC4901**	**2**
49. Anti roll bar support bracket	**MNA3501AA**	**2**

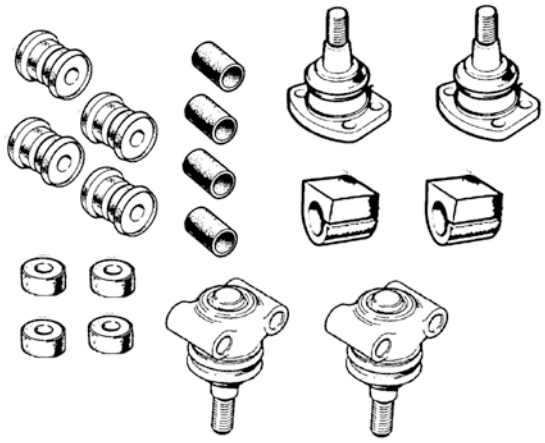

50. Front suspension rebuild kit
Includes all standard suspensions bushes with upper and lower ball joints.

3.6	**SU3015**	**1**
4.0	**SU3018**	**1**
5.3	**SU3014**	**1**
6.0	**SU3019**	**1**

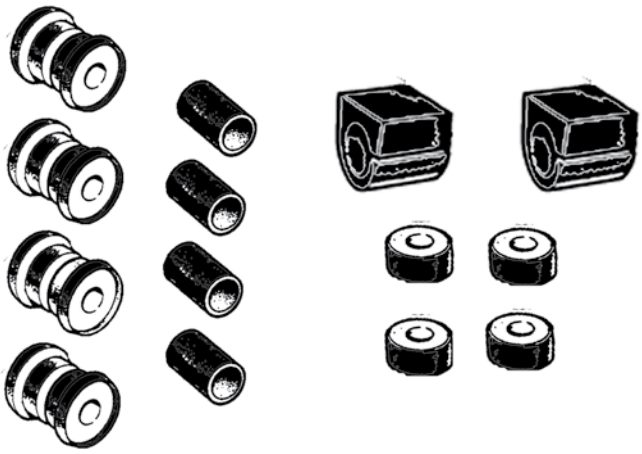

51. Uprated polyurethane bush set
Improved handling, longer life and simple to fit!

3.6	**SU3014PB**	**1**
4.0	**SU3018PB**	**1**
5.3	**SU3014PB**	**1**
6.0	**SU3019PB**	**1**

Rear Suspension

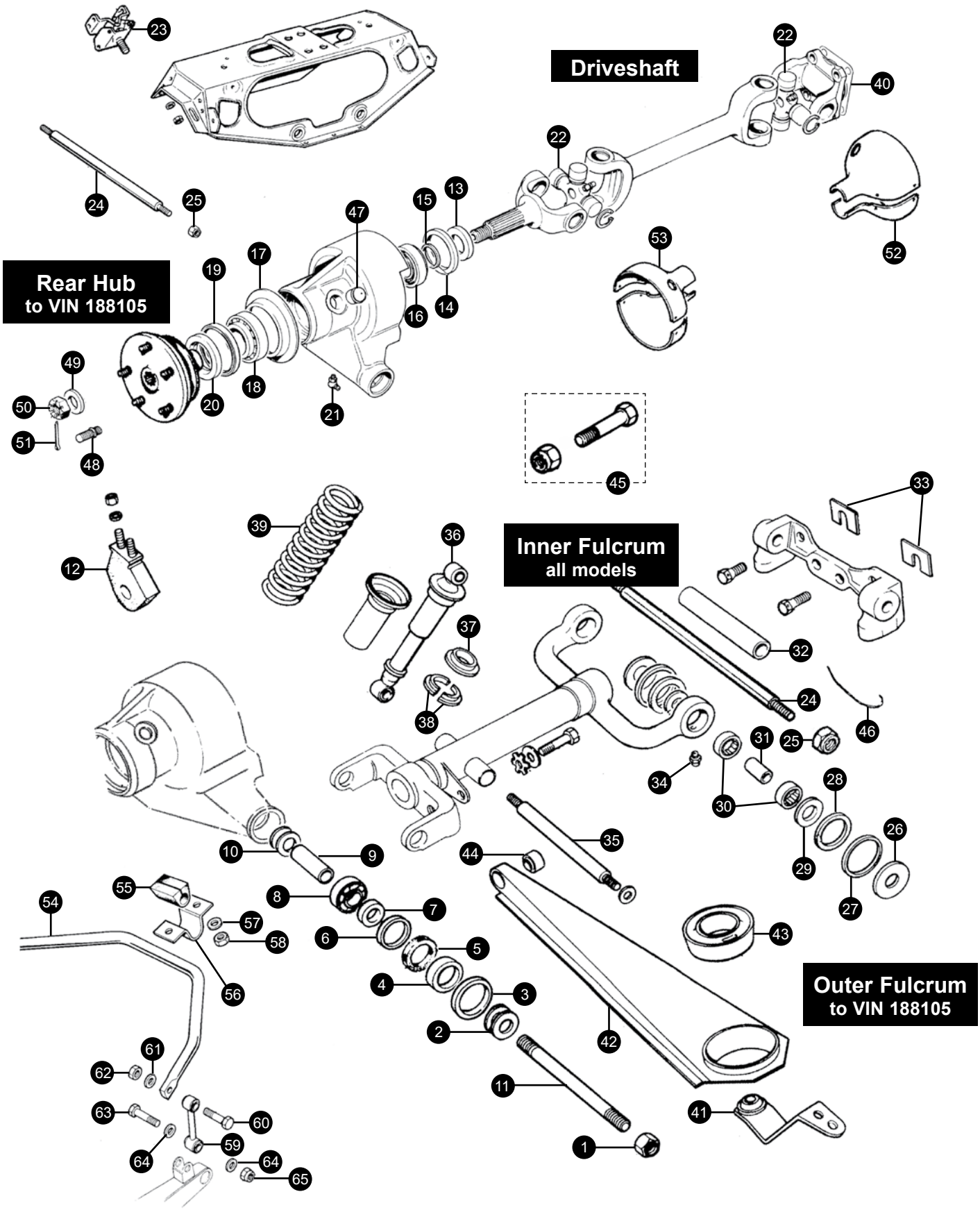

Outer Fulcrum & Rear Hub

from VIN 188105 onwards,
cars with outboard brake discs.
All other items are as per earlier cars

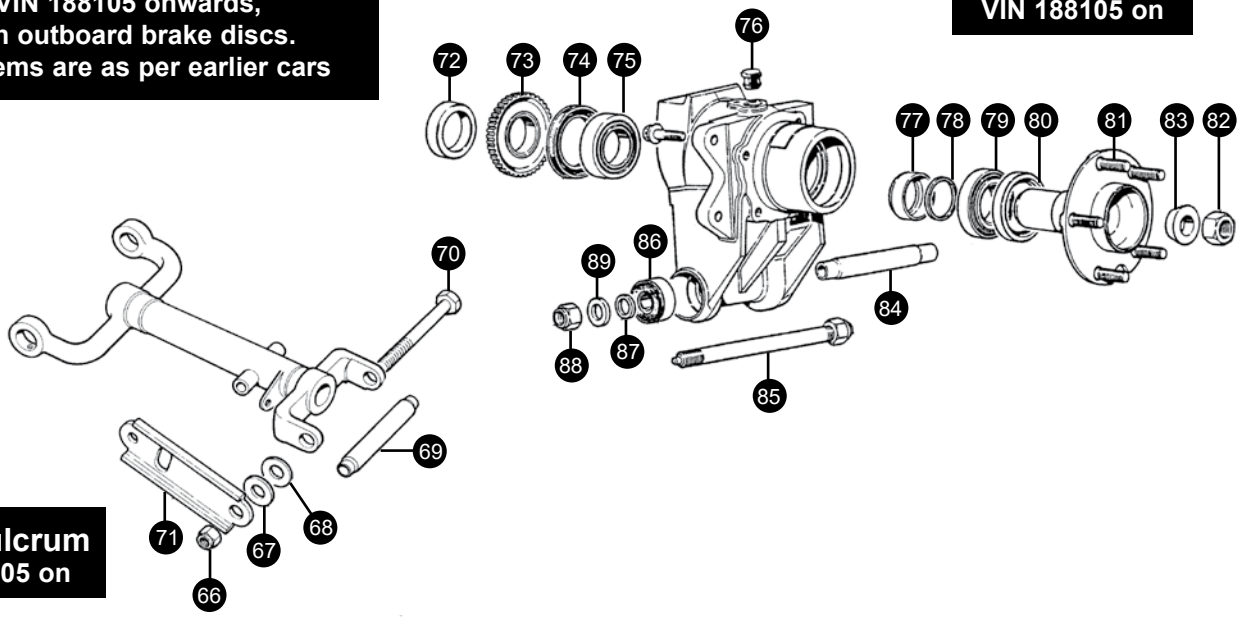

OUTER FULCRUM to VIN 188105, cars with inboard brake discs

1. Nut		C86677	4
2. Shim	0.003”	C166261	A/R
	0.007”	C166262	A/R
3. Retaining washer		C20182	4
4. Oil seal retainer		C20179	4
5. Felt oil seal		C20178	4
6. Spacer		C20180	4
7. Seal seating ring		C16628	4
8. Outer fulcrum shaft bearing		C16029	4
9. Sleeve		C166231	4
10. Shim	0.004”	C16626	A/R
	0.007”	C166263	A/R

Items 1-10 are available as an outer fulcrum repair kit which contains enough parts for one side. C16029FK 2

11. Outer fulcrum shaft		
Early to 2W4022 RHD/2W54659 LHD	C16624	2
Late 2W4023 RHD/2W54660 LHD	CBC9118	2
12. Bump stop	C40158	2

HUB & HUB CARRIER to VIN 188105, cars with inboard brake discs

13. Seating ring for inner oil seal	CCC6807	2
14. Inner hub oil seal	C15231±	2
15. Hub bearing spacer various sizes	CCC680610-50	2

(Available in 21 sizes from 0.110" to 0.150" in increments of 0.002" corresponding to the suffix on part number CCC6806 EG 0.110"=CCC680610, 0.112" =CCC680612 etc)

16. Inner hub bearing	C15230±	2
17. Water thrower	C20813	2
18. Outer hub bearing	C19066±	2
19. Outer hub seal	C24789±	2
± Included in rear wheel bearing kit	JLM9732	2
20. Seal seating ring	C24791	2
21. Grease nipple	LN30041J	2
22. Drive shaft universal joint		
to VIN188104	JLM9639	4
VIN188105 on	JLM1388	4
23. Cradle mounting standard	CAC3067	4
uprated	CAC3067P	4

INNER FULCRUM all models

24. Inner fulcrum shaft		
to VIN 188105	C17008	2
VIN188105 on	MHC2862AA	2
25. Nut	NY608041J	4
26. Thrust washer	C17165	8
27. Oil seal retainer	C17936	8
28. Sealing ring	C17213	8
29. Thrust washer	C17166	8
30. Inner fulcrum shaft bearing	C17167	8
31. Bearing tube	C17168/1	4

Items 26-32 are available as an inner fulcrum repair kit which contains enough parts for one side. C17167FK

32. Fulcrum shaft distance tube	C176631	2

Rear Suspension

33. Shim	0.005”	C28427	A/R
	0.007”	C28428	A/R
34. Grease nipple			
	Early models	C3044/1	4
	Later models	234532J	4
35. Shock absorber mounting shaft		C17013	2
36. Shock absorber			
3.6 & 5.3 non-sportspack models		CAC9091	4
(Assembly with spring)		CAC9091ASSY	4
5.3 Sportspack		CBC5742	4
4.0 & 6.0	Coupe (non sportspack)		
	To 188104	CBC5742	4
	From 188105 to 192350	CAC90911	4
	From 192351	MHD3540AA	4
	Coupe (sportspack)	CCC7466	4
	Convertible (non sportspack)		
	To 192350	JLM20792	4
	From 192351	MHD3540BA	4
	Convertible (sportspack)		
	To 189203	JLM20792	4
	From 189204	MHC3540AA	4
Koni (Replacement for CAC9091)		80-2094	4
37. Spring seat		C37272±±	4
38. Split collet		C37273±±	4

±± Fits original style of shock absorbers only

39. Coil spring			
3.6 standard models		CBC2793	4
4.0 Coupe	to 188104	CBC2793	4
	188105 on	JLM11311	2 kits
5.3 Coupe	Non Sportspack	C39692	4
	Sportspack to 188104	CBC2793	4
	188105 on	JLM11311	2 kits
6.0 Coupe	Sportspack	JLM11311	2 kits
	Non-sportspack	C39692	4
All Convertible			
	Non-Sportspack	JLM10995	2 kits
	Sportspack	JLM11569	2 kits
40. Shim		C16621	A/R
41. Radius arm safety strap		C42220	2
42. Radius arm with bushes			
3.6 (non ABS)		C41831	2
4.0 (ABS)		C41831ABS	2
5.3	Non Sportspack	C29310	2
	Sportspack	C41831	2
6.0		MHC3155AA	2

43. Large radius arm bush		
Standard	MHC3170AA	2
Uprated (road use)	MHC3170U	2
Uprated (race use)	MHC3170U/RED	2
Bolt through bush	CBC9362	2
44. Small radius arm bush		
Standard	MHC3160AA	2
Uprated (road use)	MHC3160U	2
Uprated (race use)	MHC3160U/RED	2
Bolt through bush	C25365	2
45. Nuts & bolts		
Cradle mounting to body bolt	SH605071J	8
Cradle mounting to body bolt	UFS131/25R	8
Nut for cradle mounting bolt & studs	NY605041J	20
Shock absorber top mounting bolt	BH607171	4
Shock absorber top mounting bolt-nut	NY607041J	4
Nut for shock absorber lwr mtg shaft	NY607041J	4
Safety strap to body bolt	SH605061J	2
Brake disc retaining nut	NV60741J	8
46. Stainless steel locking wire (per metre)	C21126	A/R

47. Sealing plug	to VIN 188105	C18124	2
48. Wheel stud	to VIN 188105	C13365	10
49. Washer	to VIN 188105	C24923	2
50. Nut	to VIN 188105	ND612041J	2
51. Cotter pin	to VIN 188105	L105/13U	2
52. Half shaft cover	to VIN 188105	C28844	2
53. Half shaft cover		C23616	2
54. Rear anti roll bar			
5.3 to VIN 106451/ 3.6 VIN 139052 on		C41278/2	1
All Sportspack		C41278/3	1
55. Rear anti roll bar bush			
5.3 to VIN 106451/ 3.6 VIN 139052 on		C44931	1
5.3 Sportspack		CBC4901	1
56. ARB Bracket	to VIN101279	C42114	2
	VIN101280 on	MNA3501AA	2
57. Plain washer	to VIN101279	C10217	2
	VIN101280	FW105T	2
58. Locking nut		JFY10804B	4
59. ARB link		C42907	2
60. Bolt		C43807	2
61. Washer plain		FW107T	4
62. Nut		NY607041J	2
63. Bolt		UFB143/15R	2
64. Washer		FW107T	4
65. Lockut		NY607041J	2

OUTER FULCRUM & REAR HUB from VIN 188105 onwards, cars with outboard brake discs

66. Nut	NY114041J	4
67. Washer	JLM9571	4
68. Adjustable spacer	MHC3397AA1-13	

+44 1746 765432 sales.uk@sngbarratt.com
+33 385 201420 france@sngbarratt.com
018 01 833 833 (DE only) sales.de@sngbarratt.com
+31 13 521 1552 sales.nl@sngbarratt.com
+1 800 452 4787 sales.usa@sngbarratt.com

(Available in 13 sizes from 3.905mm to 5.505mm in increments of 0.050mm, part number have suffix to suit. EG 3.905mm=MHC3398AA1, 3.955mm=MHC3397AA2 etc)

69. Sleeve	MNE4520AA	4
70. Bolt	JZB100025	4
71. Tie Down Bracket	CAC2416	4
72. Seal track spacer (non ABS)	CAC7216	
73. ABS sensor rotor	CBC4705	
74. Inner hub seal	CBC1706	
75. Inner hub bearing	JLM21053	
76. Blanking plug	CAC7452	
77. Bearing spacer	CAC5825	
78. Adjustable spacer (various sizes)	CBC9505 1 to 26	
79. Outer hub bearing	CAC6333	
80. Outer hub seal	CCC4466	
81. Wheel stud	CAC3878	
82. Hub nut	JZN100035	
83. Collar	CBC6652	
84. Sleeve	MNE4520AA	
85. Outer pivot pin	CBC2589	
86. Bearing	CAC4610	
87. Adjustable spacer (various sizes)	CBC1537 1 to 10	
88. Nut	NY114041J	
89. Washer	CBC2562	

Front Brakes

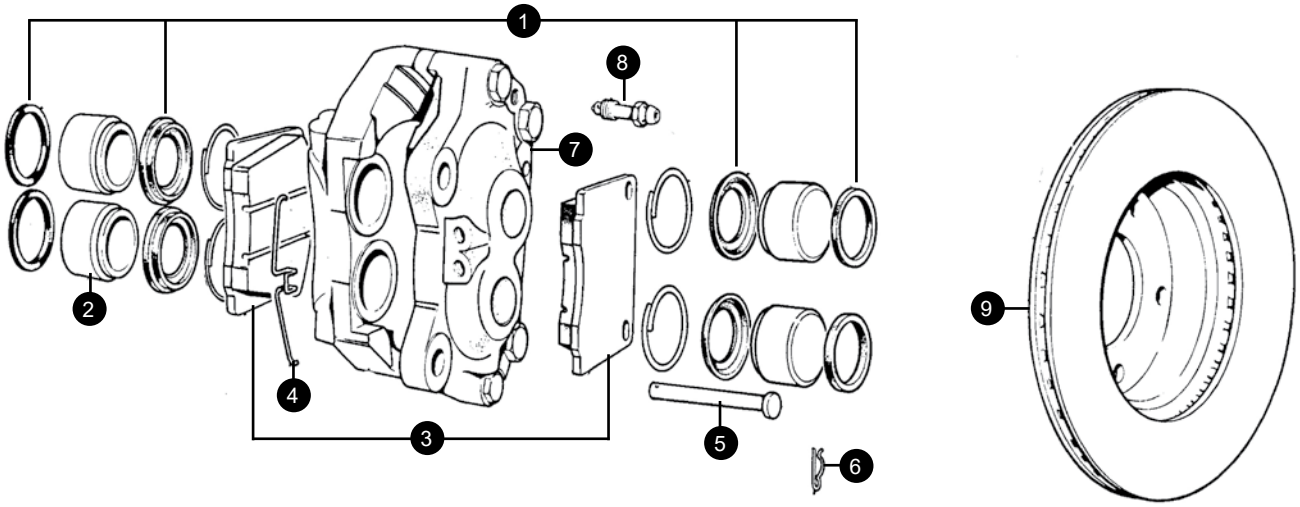

Inboard Rear Brakes to VIN 188104

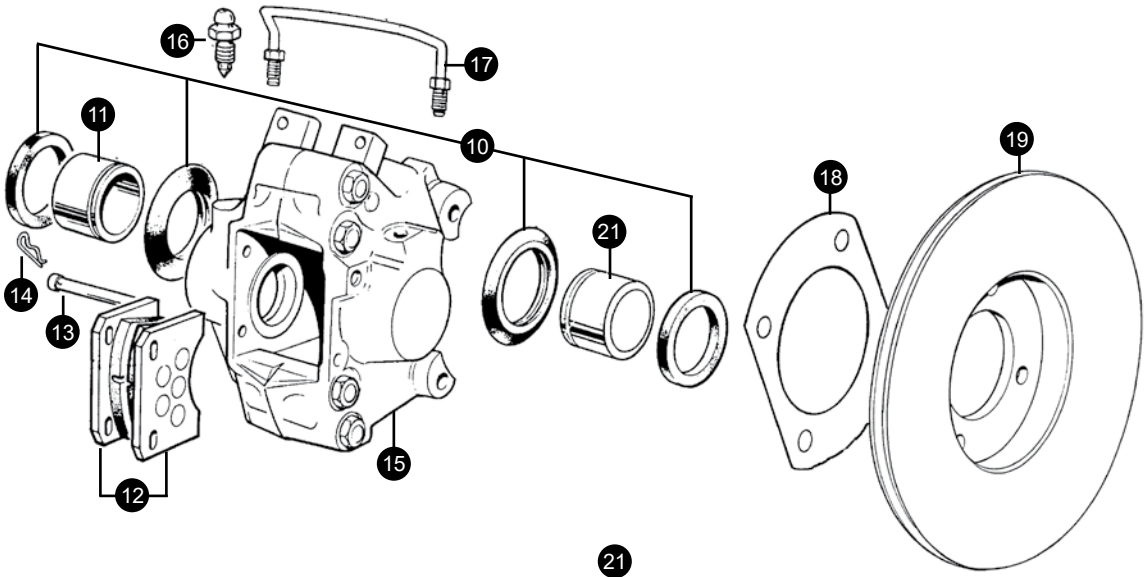

Handbrake to VIN 188104

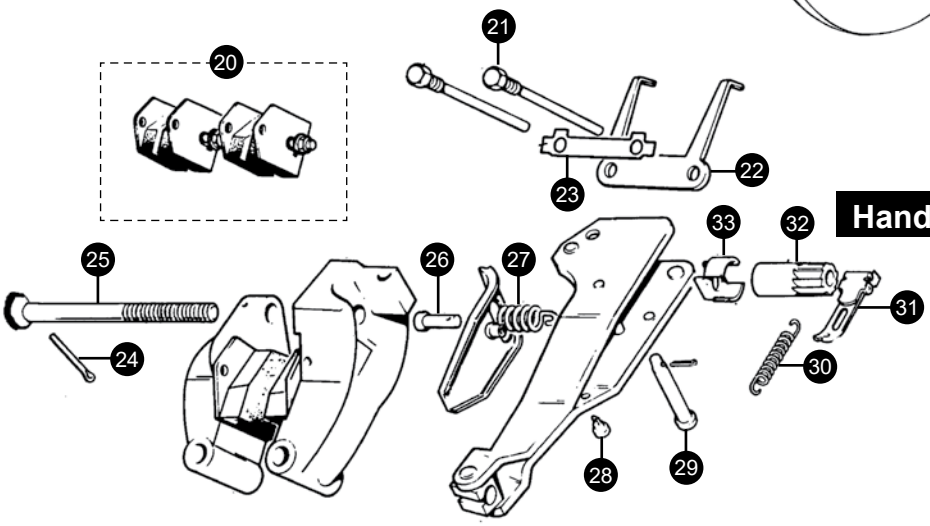

+44 1746 765432
sales.uk@sngbarratt.com
+33 385 201420
france@sngbarratt.com
018 01 833 833 (DE only)
sales.de@sngbarratt.com
+31 13 521 1552
sales.nl@sngbarratt.com
+1 800 452 4787
sales.usa@sngbarratt.com

Outboard Rear Brakes VIN 188105 on

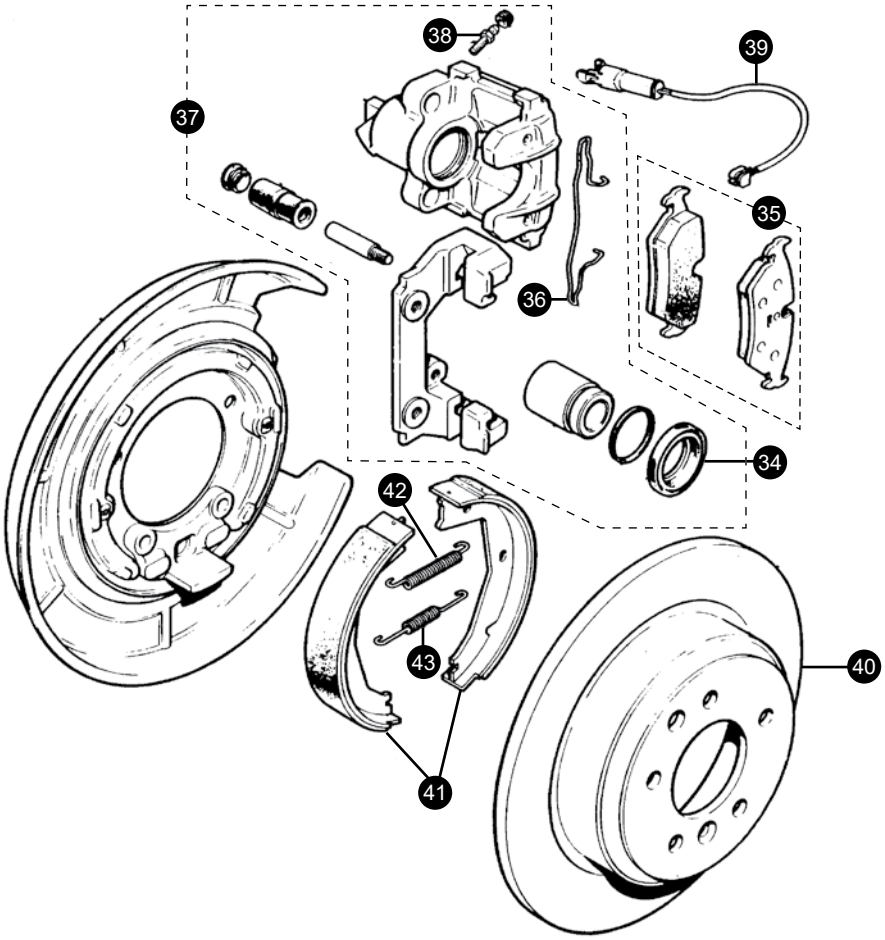

Front Brakes (all models)

1. Brake caliper seal set		RTC1116	1
2. Brake piston			
	standard	RTC1119	4
	stainless steel	RTC1119SS	4
3. Brake pad set			
	standard	JLM1510	1
	Kevlar	JLM1510K	
4. Anti rattle clip		RTC1702	4
5. Brake pad retaining pin		JLM1539	4
6. Brake pad retaining pin clip		11369	4
7. Brake caliper assembly			
	RH	AAU2102	1
	LH	AAU2103	1
8. Bleed nipple		JLM787	2
9. Brake disc		C32764P	2

Inboard Rear Brakes to VIN 188104

10. Brake caliper seal set			
to 2W1190 RHD/2W 51037		SP2505	1
2W1191 RHD/2W 51038 on		AAU3380	1
11. Brake piston			
to 2W1190 RHD/2W 51037	std	11372	4
	s/steel	11372SS	4
2W1191 RHD/2W 51038 on	std	AAU3377	4
	s/steel	AAU3377SS	4
12. Brake pad set	standard	JLM9728	1
	Kevlar	JLM9728K	1
13. Brake pad retaining pin		11368	4
14. Brake pad retaining pin clip		11369	4
15. Brake caliper assembly			
to 2W1190 RHD/2W 51037	RH	11833R	1
	LH	11832R	1
2W1191 RHD/2W 51038 on	RH	AAU3378R	1
	LH	AAU3379R	1
16. Bleed nipple		556508J	2
17. Bridge pipe		AEU1068	2
18. Shim	0.020”	C33440	A/R
	0.005”	C334401	A/R
	0.010”	C334402	A/R

Front & Rear Brakes

19. Brake disc		C26779	2
20. Handbrake pad set			
	Standard	JLM9518*	1
	Kevlar	JLM9518K	1
21. Handbrake attachment bolt		8016	4
22. Retraction fork		9750	2
23. Retraction fork locktab		9751	2
24. Cotter pin		3752	2
25. Adjustment bolt		8845	2
26. Anchor pin		8938	2
27. Return spring		8940	2
28. Anchor pin		8938	2
29. Hinge pin		8841	2
30. Pawl tension spring		8837	2
31. Pawl assembly		8836	2
32. Handbrake ratchet nut		8980	2
33. Ratchet nut friction spring		8840	2

<u>Outboard Rear Brakes from 1992 (from 188105)</u>

34. Brake caliper seal set			
	to VIN 198334	JLM11331	1
	VIN 198335	JLM20671	1
35. Brake pad set			
to VIN 198334	standard	JLM1833	1

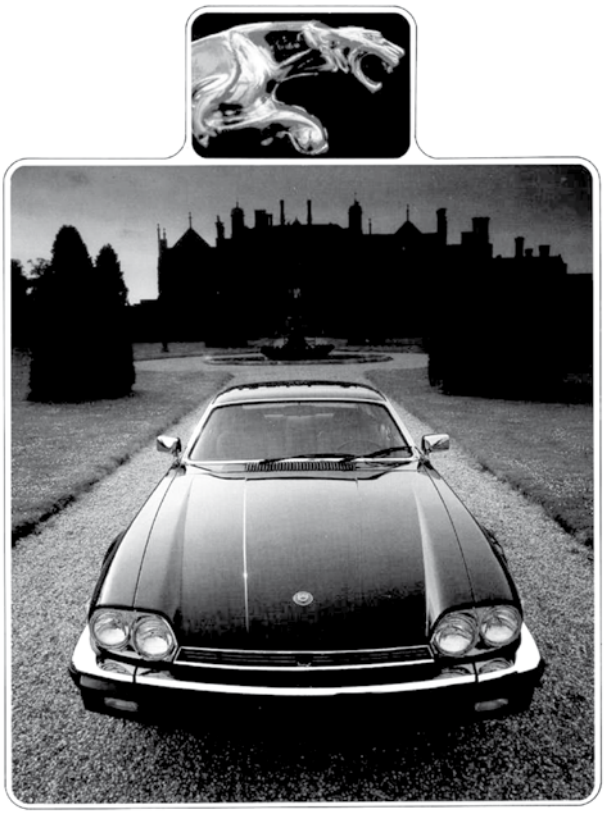

	Kevlar	JLM1833K	1
From VIN 198335	standard	JLM21344	1
	Kevlar	JLM21344K	1
36. Housing clip		MJD7864AA	2
37. Brake caliper assembly			
VIN to 198334	RH	JLM12422	1
	LH	JLM12423	1
From VIN 198335	RH	JLM12426	1
	LH	JLM12427	1
38. Bleed screw	to VIN 198334	JLM11328	2
	from VIN198335	JLM12120	2
39. Brake pad wear sensor		DBC6596	2
40. Brake disc	to 198334	JLM12424	1 kit
	from 198335	JLM20342	1 kit
41. Brake shoe kit		JLM2209	1
42. Tension spring (upper)		JLM2204	2
43. Tension spring (lower)		JLM2203	2

+44 1746 765432
sales.uk@sngbarratt.com
+33 385 201420
france@sngbarratt.com
018 01 833 833 (DE only)
sales.de@sngbarratt.com
+31 13 521 1552
sales.nl@sngbarratt.com
+1 800 452 4787
sales.usa@sngbarratt.com

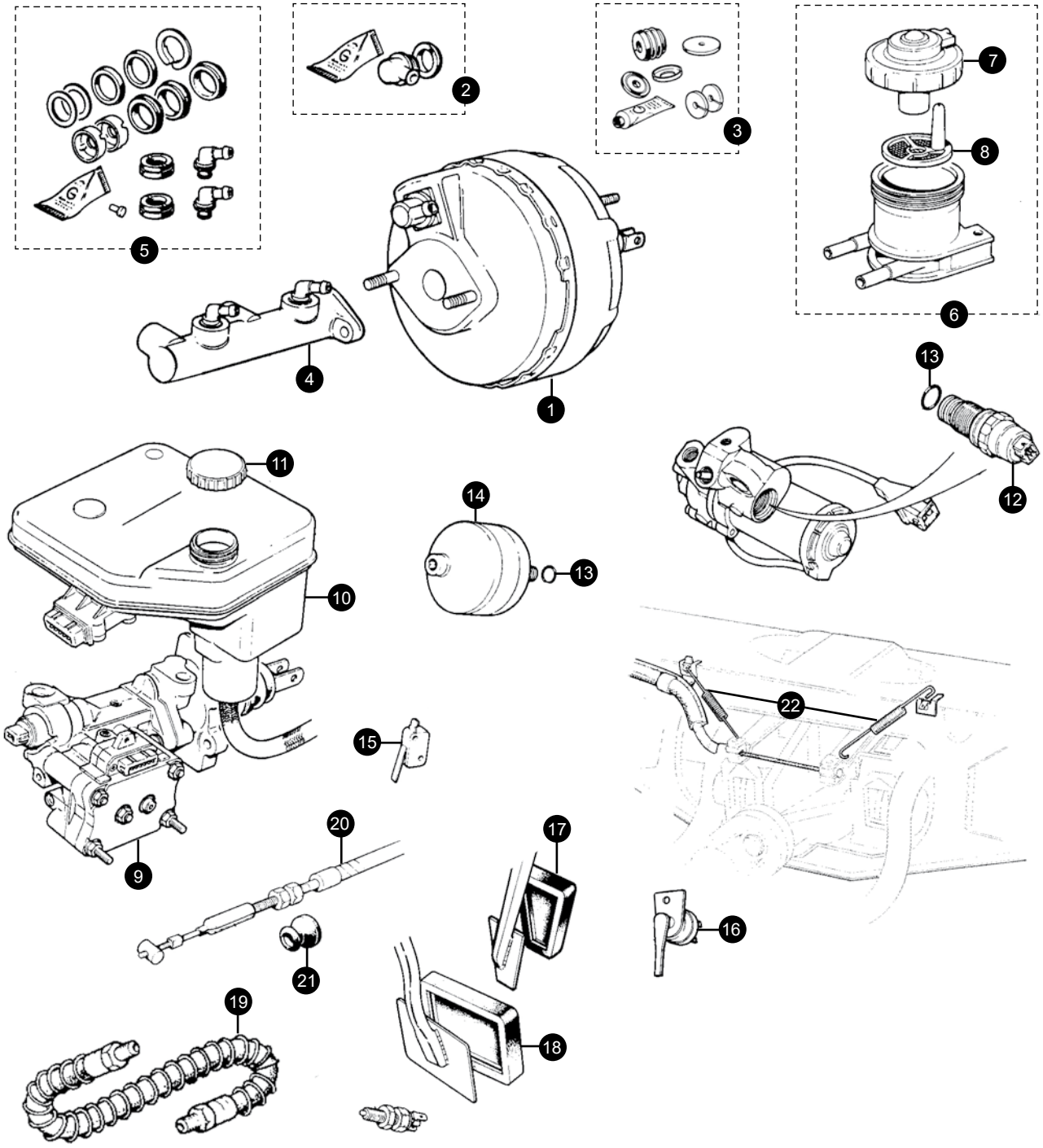
1
2
3
4
5
6
7
8
9
10
11
12
13
14
13
15
16
17
18
19
20
21
22

Braking System Components

1. Servo assembly		CAC1227R	1
2. Non return valve repair kit		RTC1128	1
3. Servo repair kit		12446	1
4. Brake master cylinder	RHD	CAC1582	1
	LHD	CAC1583	1
5. Brake master cylinder repair kit		AAU6839	1
6. Brake fluid reservoir			
Early to VIN 105047		CAC4578	1
Late VIN 105048 on		CAC4578	1
7. Brake fluid reservoir cap		C45055	1
8. Fluid filter		C33081	1
<u>Teves ABS System</u>			
9. Actuation assembly kit	RHD	JLM1476	1
	LHD	JLM1475	1
10. Reservoir kit	RHD	JLM1583	1
	LHD	JLM1584	1
11. Filler cap		JLM1469	1
12. Pressure warning light switch			
Early to VIN 165790		JLM1465	1
Late VIN 165791 on		JLM1908	1
13. O'ring & seal kit		JLM1477	1
14. Accumulator sphere		JLM1907	1
15. Handbrake warning light switch		DAC3351	1
16. Brake light switch			
<u>5.3 models</u>			
Early to VIN 101191		JLM21585	1
Late VIN 101192 on		DAC1308	1
3.6 models		DBC2134	1
<u>Teves ABS</u>			
Without cruise control		DBC3092	1
With cruise control		DBC2134	1
17. Manual brake pedal rubber			
5.3 to VIN 147268		C8969	1
3.6 to VIN 147268		CAC5609	1
3.6 & 5.3 VIN 147269 on		CAC9760	1
18. Automatic pedal rubber		C21515	1
19. Brake hoses			
<u>Standard rubber to VIN 198334</u>			
Front		CBC1390	2
Rear		CBC1393	1
<u>Stainless steel braided to VIN 198334</u>			
Front		CBC1390SS	2
Rear		CBC1393SS	1
20. Handbrake cable			
Early to VIN 105047		C419885	1
Late VIN 105048 on		C419883	1
21. Rubber gaiter		C43424	1
22. Handbrake pull off spring		C22690	2

Braking System Components VIN 198335 on

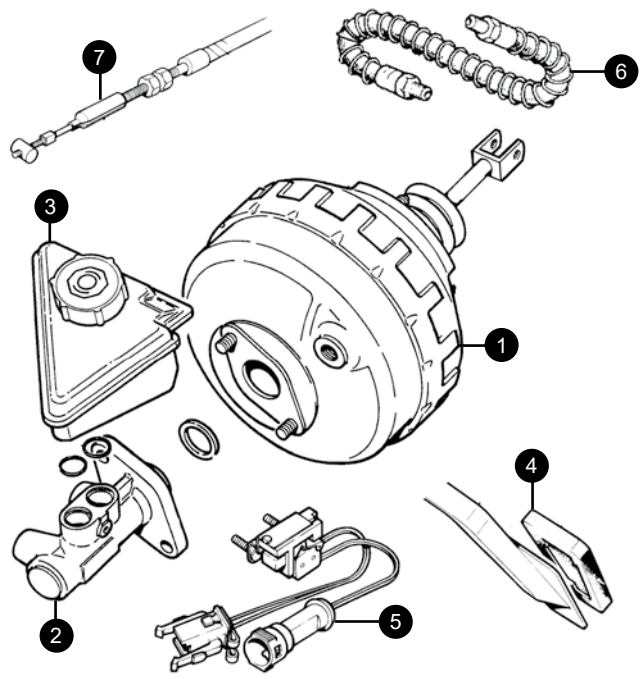

1. Brake servo	RHD	JLM12200	1
	LHD	JLM12078	1
2. Brake master cylinder	RHD	JLM12232	1
	LHD	JLM12080	1
3. Brake Fluid Reservoir	RHD	JLM12202	1
	LHD	JLM12203	1
4. Brake Pedal Rubber		CAC9760	1
5. Brake light switch			
Cruise control		LHF6420DA	1
Non Cruise Control		LHF6420AA	1
6. Brake hoses	Front	MHF5670AA	2
	Rear	MHF5670BA	1
7. Handbrake cable		MHF5150BA	1

+44 1746 765432
sales.uk@sngbarratt.com
+33 385 201420
france@sngbarratt.com
018 01 833 833 (DE only)
sales.de@sngbarratt.com
+31 13 521 1552
sales.nl@sngbarratt.com
+1 800 452 4787
sales.usa@sngbarratt.com

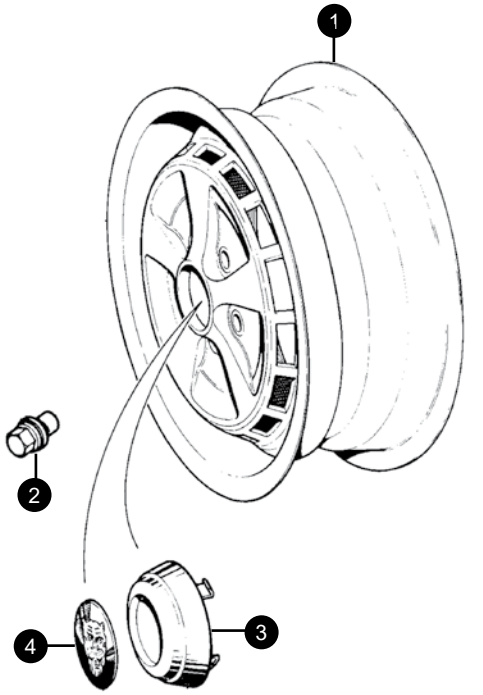

5 Spoke Alloy

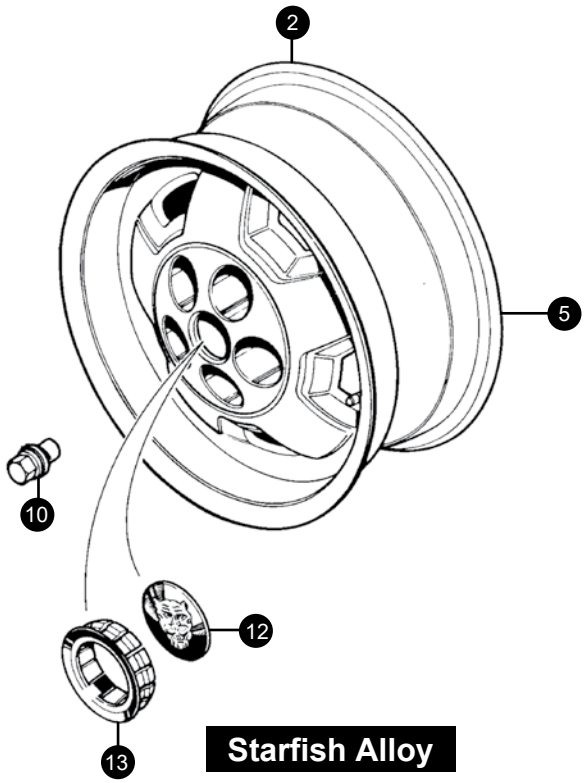

Starfish Alloy

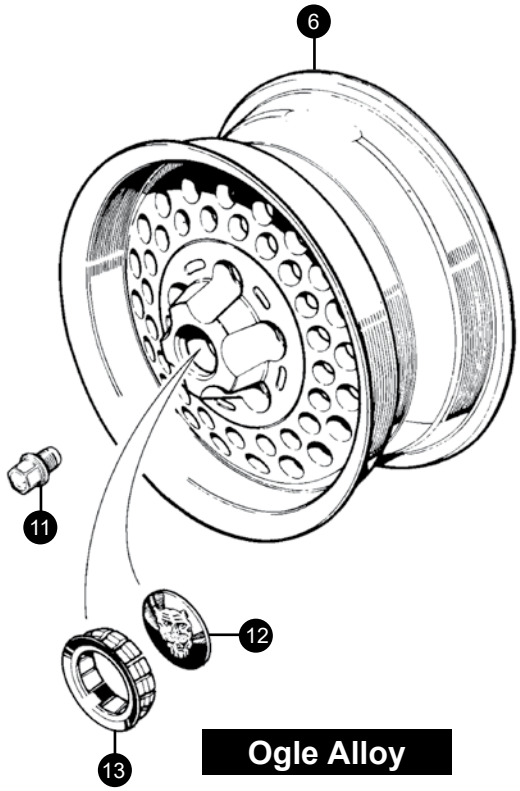

Ogle Alloy

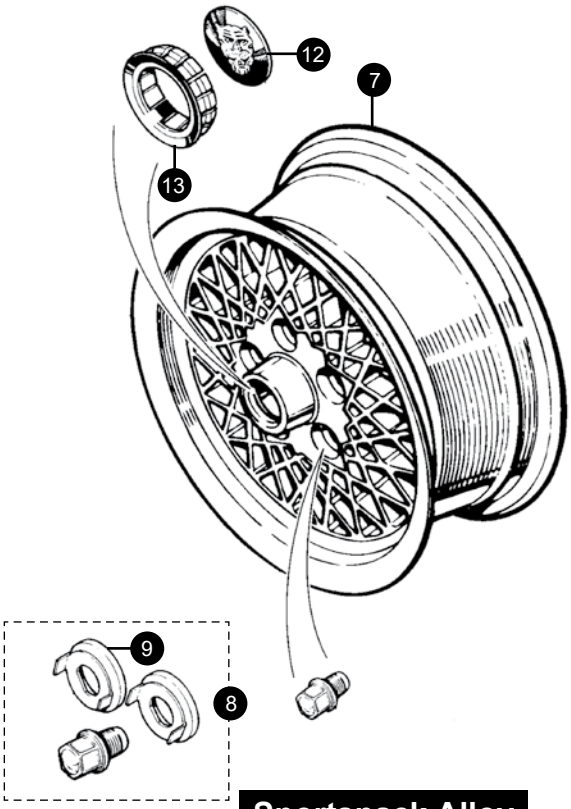

Sportspack Alloy

Roadwheels VIN 179737 on

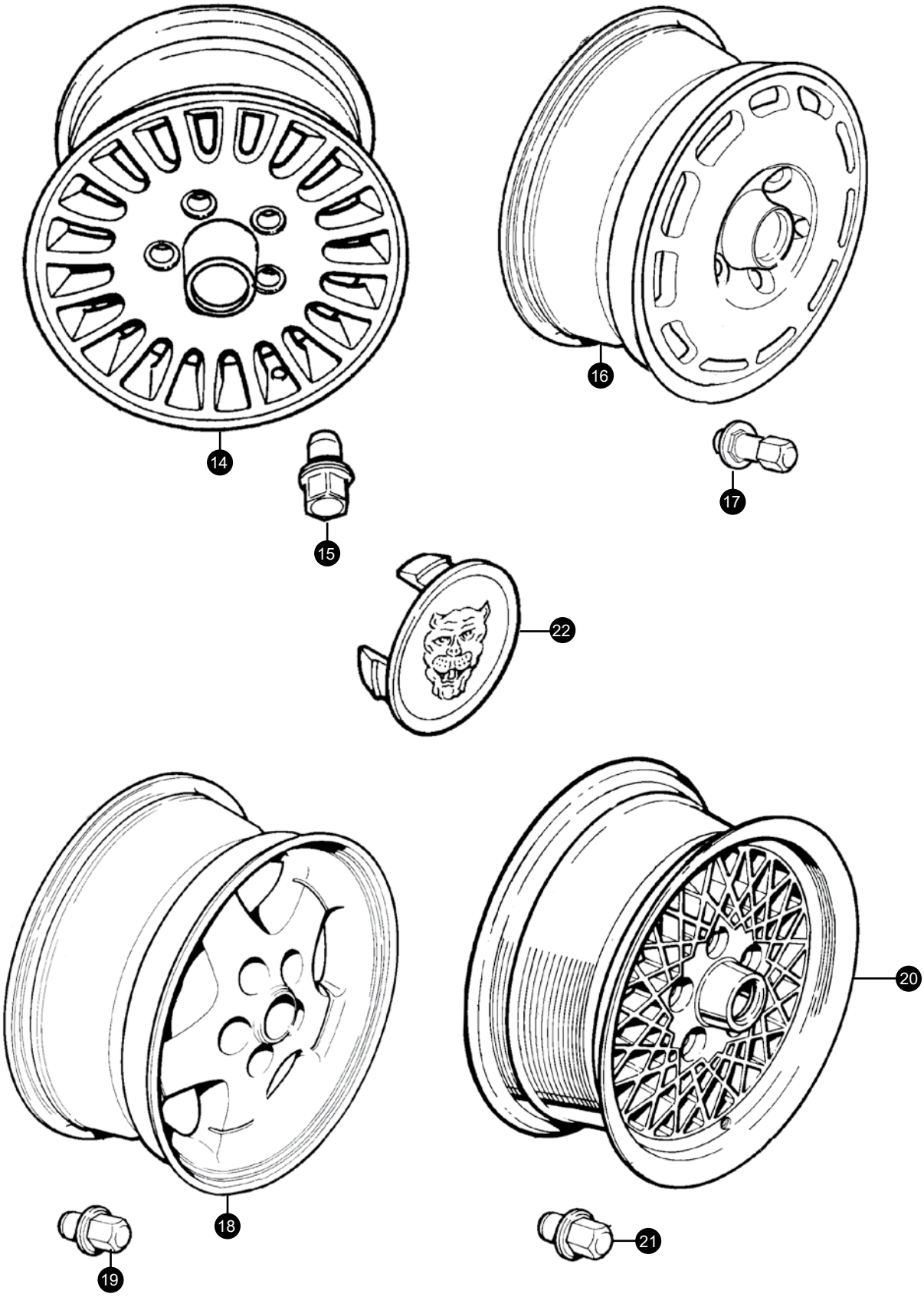

+44 1746 765432
sales.uk@sngbarratt.com

+33 385 201420
france@sngbarratt.com

018 01 833 833 (DE only)
sales.de@sngbarratt.com

+31 13 521 1552
sales.nl@sngbarratt.com

+1 800 452 4787
sales.usa@sngbarratt.com

To VIN 179736

1. 5 spoke alloy road wheel			
to VIN 101854	**silver/dark grey**	**CAC3913**	**5**
VIN 101855 on	**silver/light grey**	**CAC3914**	**5**
2. Wheel nut			
3/4" across flats		**C41292**	**20**
7/8" across flats		**CBC1262**	**20**
3. Centre cap		**CAC9820**	**4**
4. Badge		**C42191**	**4**
5. Starfish alloy roadwheel		**CAC4379**	**4**
6. Ogle perforated alloy roadwheel		**CAC5667**	**4**
7. Sportspack alloy roadwheel		**CBC2469**	**4**
8. Sportspack roadwheel fitting kit		**JLM1459**	**1**

(2 x JLM1458 washers & 20 x CCC7028 wheel nuts)

9. Turning circle limiting washer	**JLM1458**	**2**

(Fitted to the steering rack on cars with CBC2469 Sportspack wheels to prevent wheel rub on full lock.)

10. Wheel nut for Starfish wheels	**CAC4549**	**20**
11. Wheel nut for Ogle wheels	**CBC1262**	**20**
12. Jaguar centre badge	**C42191**	**4**
13. Centre badge retainer		
Starfish wheels	**CAC5073**	**4**
Ogle perforated	**CAC6442**	**4**

From VIN 179737

14. 20 Spoke diamond turned wheel	**MNA6113FB**	**4**
15. Wheel nut	**CCC7028**	**20**
16. 11 spoke cast	**MHF6113AB**	**4**
17. Wheel nut	**CCC7029**	**20**
18. 5 spoke wheel		
Silver painted alloy	**CCC6943**	**4**
Chrome	**MHC6113EA**	**4**
Alloy	**MHC6113DA**	**4**
19. Wheel nut	**CCC7029**	**20**
20. Lattice wheel		
6.5J x 15"	**CBC2469**	**4**
7J x 16"	**MHB6115AA**	**4**
21. Wheel nut	**CCC7028**	**20**

22. Wheel centre badges
All of the listed badges will fit any of these wheels, you can simply choose which colour you would like to fit!

Silver head on green	**MNA6249AB**	**4**
Gold head on ruby	**MNA6249CB**	**4**
Silver head on ruby	**MNA6249EA**	**4**
Gold head on black	**MNA6249FA**	**4**
Silver head on grey	**MNA6249GA**	**4**
Silver head on black	**MXD6249CA**	**4**

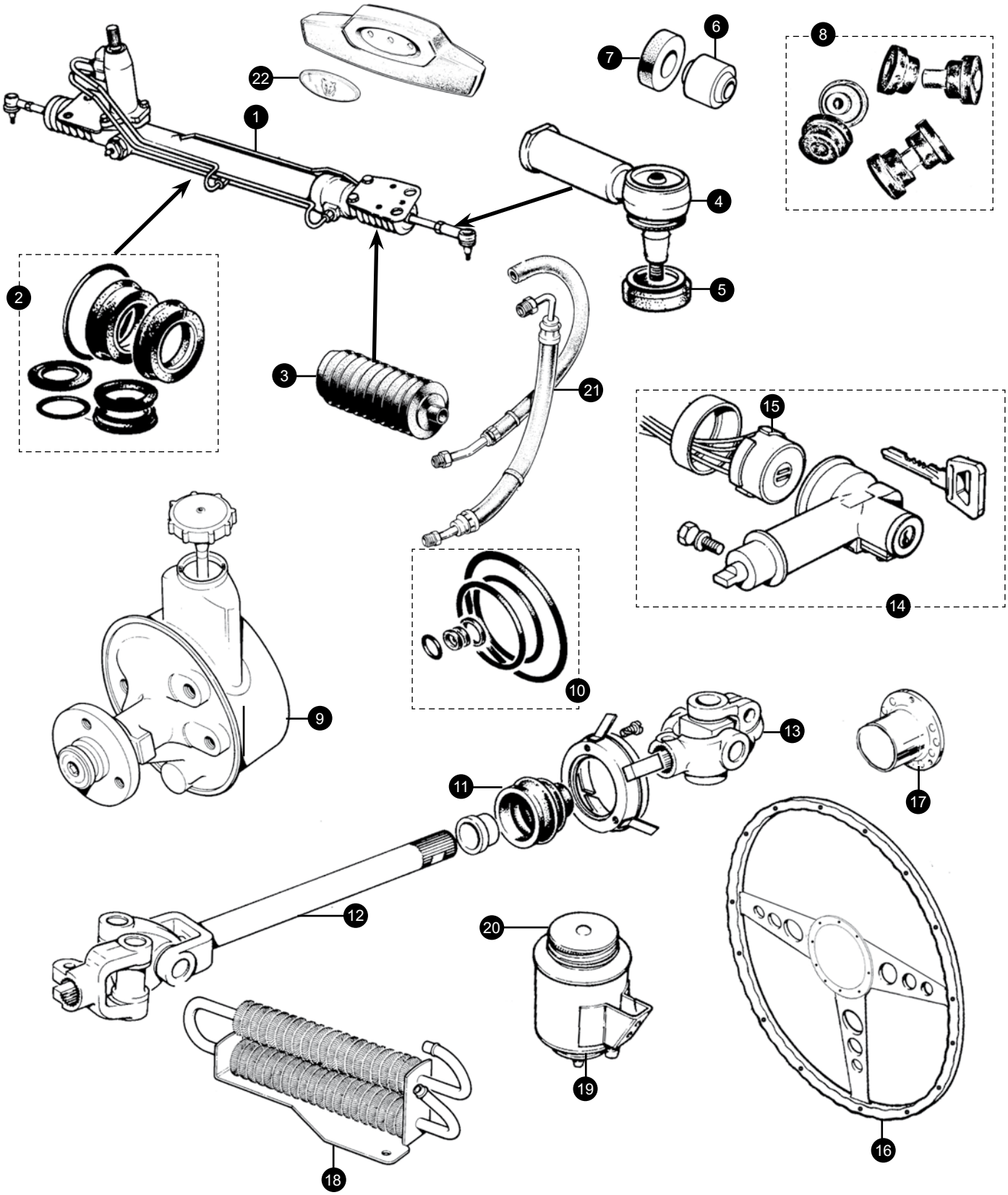

+44 1746 765432
sales.uk@sngbarratt.com
+33 385 201420
france@sngbarratt.com
018 01 833 833 (DE only)
sales.de@sngbarratt.com
+31 13 521 1552
sales.nl@sngbarratt.com
+1 800 452 4787
sales.usa@sngbarratt.com

1. Reconditioned steering rack assembly

Pre ZF Type (up to 1991/VIN 179736)

	RHD	CBC1715	1
	LHD	CBC1714	1

1991 on

4.0 Non Sportspack	RHD	JLM20177	1
	LHD	JLM20179	1
6.0/4.0 Sportspack	RHD	JLM20169	1
	LHD	JLM20171	1

Note that very late 6.0 LHD cars (after VIN 199738) were fitted with part number MHD3891AA.

5.3 Non-Sportspack	RHD	JLM20173	1
	LHD	JLM20175	1
5.3 Sportspack	RHD	JLM20169	1
	LHD	JLM20171	1

2. Steering rack seal kit

Pre ZF Type (up to 1991/VIN 179736)	JLM10834	1
ZF Type (1991/ VIN179736 on)	JLM10834ZF	1

3. Steering rack bellows

Pre H.E.	C33417	2
H.E. Non ZF Type (up to 1991/179736)	JLM347	2
ZF Type (1991/VIN 179737 on)	JLM11688	2

4. Track rod end	JLM1098	2
5. Track rod end gaiter	EAW2270J	2

6. Standard steering rack mounting bush

3.6 (up to 1991/179736)	CAC1634±	3
V12 (up to 1991/179736)	CAC1635±	3

7. Steering rack mounting washer

Up to 1991/VIN 179736	C29406	6

8. Heavy duty steering rack mounting bush set

Up to 1991/VIN 179736	CAC1635K	1

CAC1635K is a longer lasting 3 piece bush kit made from polyurethane that will transform your steering and last much longer than normal bushes. These are packed in car sets and have the mounting washers already moulded into them.

9. Power steering pump

3.6/4.0	MMD8110AA	1
5.3/6.0	EAC3167R	1

10. Power steering pump seal set

3.6/4.0	AEU2787	1
5.3/6.0	518564J	1

11. Steering column gaiter	C42001	1

12. Lower steering column & universal joint assembly

RHD	HHB9500AA	1
LHD	HHB9501AA	1

13. Lower steering joint assembly

to VIN 179736 (up to 1991)	CAC3470	1
VIN 179737 on (1991 on)	CBC6107	1

14. Steering column lock & switch assembly

Pre H.E.	DAC1419	1
H.E.	DAC4151	1

15. Ignition switch

Pre H.E.	DAC1422	1
H.E.	DAC2852	1

16. Motolita woodrim steering wheel

Our best selling wheel simply looks great on any XJS. Simply select the diameter that suits you best from 13, 14 or 15 inches and add the boss kit listed below.

13”	MLW1115-13	1
14”	MLW1115-14	1
15”	MLW1115-15	1

17. Motolita steering wheel boss (includes hornpush)

to 1986	B54H	1
1986 on	B54A	1

18. Power steering oil cooler

5.3/6.0 only	C43719	1

19. Power steering reservoir

3.6/4.0	CAC6853	1

20. Power steering reservoir filler cap

3.6/4.0	JLM2162	1

21. Power steering hoses

3.6/4.0 Low pressure hose

RHD	CBC5357	1
LHD	CBC2616	1

Reservoir to pump	MHD3980AA	1

3.6/4.0 High pressure hose

RHD	CAC5509	1
LHD	CAC6941	1

5.3/6.0 Low pressure hose

RHD with catalyst (UK and Japan only)	CBC9404	1
RHD with catalyst (not UK and Japan)	C45906	1
LHD	C43722	1

5.3/6.0 High pressure hose

RHD with catalyst (UK and Japan only)	CAC3654	1
RHD with catalyst (not UK and Japan)	CBC9148	1
LHD	MHE3985BA	1

22. Horn push badge	CBC7702	1

Cooling System to VIN 179736

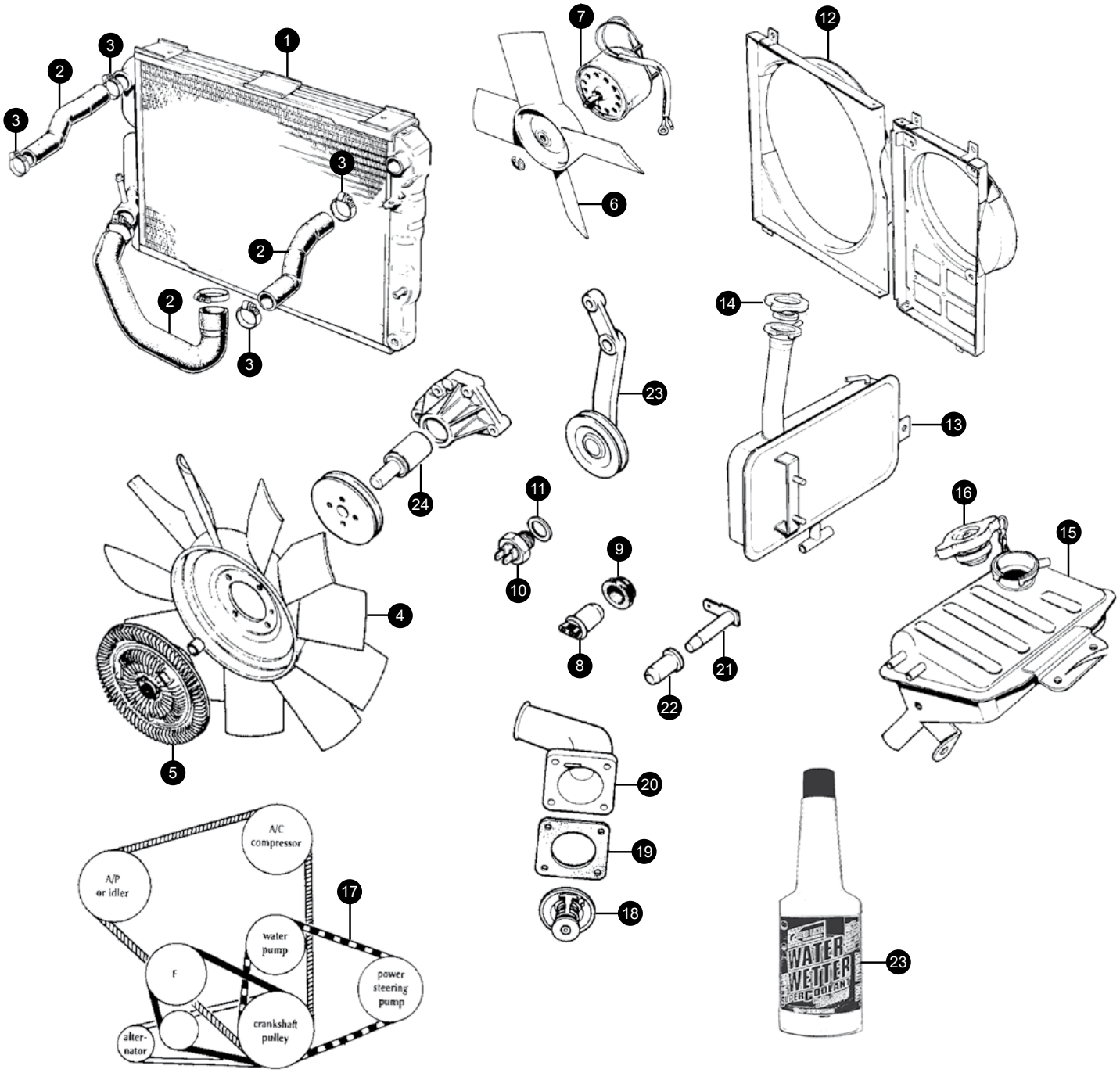

+44 1746 765432
sales.uk@sngbarratt.com
+33 385 201420
france@sngbarratt.com
018 01 833 833 (DE only)
sales.de@sngbarratt.com
+31 13 521 1552
sales.nl@sngbarratt.com
+1 800 452 4787
sales.usa@sngbarratt.com

1. Radiator assembly			
to VIN 105047			
Manual		**C43601**	**1**
Auto		**C43602**	**1**
VIN 105048 to 115815		**CAC6915**	**1**
VIN 115816 to 126092		**CAC8600**	**1**
VIN 126093 on		**MHE4190CA**	**1**
2. Cotton reinforced hose kit			
3.6		**HK042R**	**1**
V12		**HK029R**	**1**
3. Hose clips			
3/8”-1/2”		**CS10000**	**A/R**
1/2”-5/8”		**CS10M00**	**A/R**
1/2-3/4”		**CS1000**	**A/R**
5/8”-7/8”		**CS100**	**A/R**
3/4”-1”		**CS100X**	**A/R**
7/8”-1 1/8”		**CS101A**	**A/R**
1”-1 3/8”		**CS101**	**A/R**
1 1/8”-1 5/8”		**CS101X**	**A/R**
1 1/4”-1 7/8”		**CS102A**	**A/R**
1 1/2”-2 1/8”		**CS102**	**A/R**
1 3/4”-2 3/8”		**CS102X**	**A/R**
2-2 3/4”		**CS103**	**A/R**
4. Main radiator cooling fan			
3.6		**EAC9367**	**1**
5.3 to VIN 104145 (metal)		**C39831**	**1**
5.3 VIN 104146 to 104800 (plastic)		**C29882**	**1**
5.3 VIN 104801 on (plastic)		**EBC4553**	**1**
5. Viscous fan coupling			
3.6		**EAC4751**	**1**
5.3 to VIN 104145 (metal fan)		**C45015**	**1**
5.3 VIN 104146 on (plastic fan)		**EAC4751**	**1**
6. Auxiliary radiator cooling fan			
3.6		**CAC5219**	**1**
5.3		**C37880**	**1**
7. Auxiliary radiator cooling fan motor			
3.6		**CAC2047**	**1**
5.3		**C38009**	**1**
8. Fan thermo switch			
5.3	**push in**	**EAC1322**	**1**
9. Switch seal			
5.3	**push in**	**C37990**	**1**
10. Fan thermo switch			
3.6	**screw in**	**DBC2145**	**1**
5.3	**screw in**	**EAC2510**	**1**
11. Switch washer			
3.6 & 5.3	**screw in**	**C457593**	**1**
12. Radiator fan cowl			
3.6 to VIN 157115		**CAC5201**	**1**
3.6 VIN 157118 on		**CBC7297**	**1**
<u>5.3 Main Fain Cowl</u>			
to Eng 8S18000		**C40187**	**1**
Eng 8S 18001 on		**CCC6955**	**1**
<u>5.3 Electric Fan Cowl</u>			
to Eng 8S18000		**C43729**	**1**
Eng 8S 18001 on		**CCC5735/1**	**1**
13. V12 radiator header/expansion tank			
to VIN 105047		**CAC4337**	**1**
VIN 105048 to 115815		**CAC4566**	**1**
VIN115815 to 147268 (with coolant probe)		**CAC8614**	**1**
VIN 147269 on		**CCC6725**	**1**
14. V12 header tank cap	**15lb**	**CCC6707**	**1**
15. 3.6 radiator header/expansion tank			
up to 1988		**CBC4639**	**1**
1988 on		**CCC3699**	**1**
16. 3.6 header tank cap			
up to 1988		**CCC6707**	**1**
1988 on		**CAC4560**	**1**
17. Drive belts			
3.6	**waterpump & 80 amp alt**	**EAC3850**	**1**
	waterpump & 90 amp alt	**EAC7033**	**1**
	compressor	**EAC3878**	**1**
5.3	**waterpump & pas**	**EAC1323**	**1**
to 8S 57571	**alternator (non ABS)**	**EAC1616**	**1**
8S 57572 on	**alternator (with ABS)**	**EAC9369**	**1**
	fan	**C43070**	**1**
	air con compressor	**EAC1605**	**1**
18. Thermostat			
5.3	**82 degree**	**EBC3576**	**1**
	88 degree	**EBC3577**	**1**
3.6	**88 degree**	**EBC3621**	**1**
19. Thermostat gasket/ O’ring			
3.6	**to eng 9DPAMA106276**	**EAC4430**	**1**
	eng 9DPAMA106277 on	**EAC8999**	**1**
5.3 RH square shaped			
	to eng 8S 83198	**EBC8330**	**1**
	eng 8S 83199 on	**EBC8331**	**1**
5.3 LH	**to eng 8S 83198**	**EBC8331**	**1**
	eng 8S 83199 on	**EBC8330**	**1**
20. Thermostat housing			
3.6	**to VIN 139051**	**EAC6138**	**1**
	VIN139052 on	**EAC6140**	**1**
5.3 RH square shaped			
	to eng 8S 64244	**C42606**	**1**
	eng 8S 64245 on	**EBC10203**	**1**
5.3 LH		**EBC10220**	**1**
21. Low coolant probe		**C43222**	**1**
22. Low coolant probe sealing bush		**C43221**	**1**
23. Jockey wheel arm assembly		**EAC8097**	**1**
24. Main fan bearing			
to VIN10415		**C37836**	**1**
VIN 10416 on		**EAC3437**	**1**
25. Water Wetter miracle coolant		**CH2077**	**1**

Simply add to the coolant on your Jaguar and it can reduce the running temperature of your cooling system by up to 20 degrees Farenheit.

Cooling System VIN 179737 on

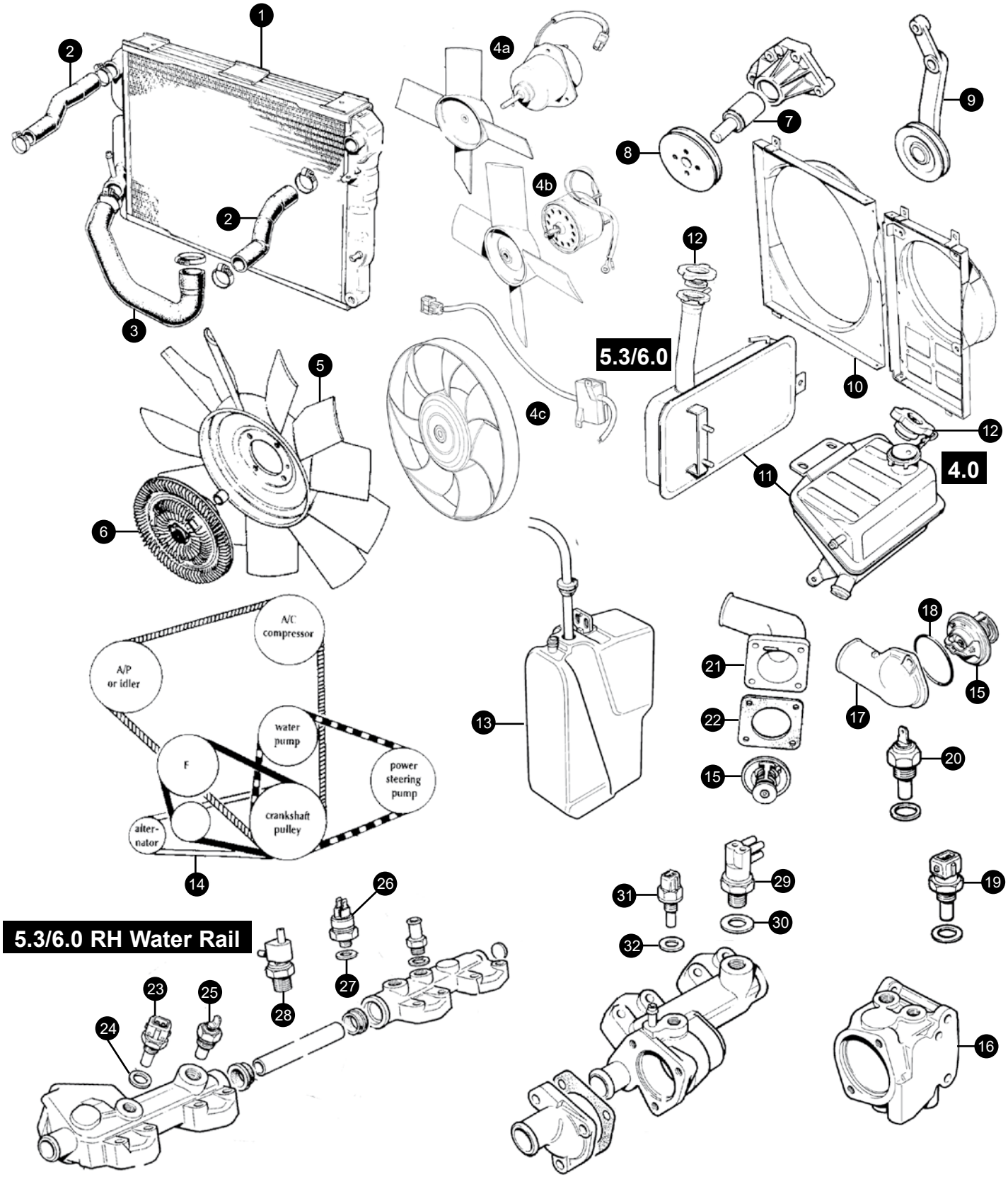

+44 1746 765432
sales.uk@sngbarratt.com

+33 385 201420
france@sngbarratt.com

018 01 833 833 (DE only)
sales.de@sngbarratt.com

+31 13 521 1552
sales.nl@sngbarratt.com

+1 800 452 4787
sales.usa@sngbarratt.com

1. Radiator			
4.0 manual		CBC4049	1
4.0 Automatic		MHE4190AA	1
5.3/6.0		MHE4190CA	1
2. Top hose			
4.0		CAC4100	1
5.3	LH	C43267	1
	RH	CBC4838	1
6.0	LH	CCC6998	1
	RH	CBC4838	1
3. Bottom hose (for cars without water heater only)			
4.0		CBC5150	1
5.3		C41102	1
6.0		CCC6993	1
4. Electric cooling fan			
a) 4.0	motor	CBC6685	1
	fan	CAC5219	1
b) 5.3 (with 4 blade fan)	motor	C38009	1
	fan	C37880	1
c) 5.3/6.0 (with 7 blade fan)			
Fan & motor assembly		CCC5703	1
5. Cooling fan			
4.0	to eng 145765	EAC9367	1
	eng 145766 on	EBC4553	1
5.3/6.0		EBC4553	1
6. Viscous fan coupling		NBC2215AA	1
7. Fan bearing	5.3/6.0	EAC3437	1
8. Fan pulley	5.3/6.0	EAC3438	1
9. Jockey pulley	5.3/6.0	EAC8097	1
10. Fan cowl	4.0	CBC7427	1
	5.3/6.0	CCC57351	1
11. Radiator header/ expansion tank			
4.0		CCC3699	1
5.3/6.0 (with low coolant probe)		CCC6725	1
12. Radiator header/ expansion tank cap			
		CCC6707	1

(N.B. Some 4 litre cars were fitted with 15lb cap, in this case use CAC4568)

13. Atmospheric recovery bottle			
4.0		MHC4460AA	1
5.3/6.0 to 189079		CBC9839	1
6.0 from 189080		MHC4460BA	1
14. Drive belts			
4.0 alternator to 185819		EAC7033	1
	from 185820 to 188104	EAC4450	1
	from 188105 onwards	EBC11306	1
4.0 compressor		EAC3878	1
4.0 air pump		EAC6335	1
5.3 alternator to 185819		EAC9369	1
	from 185820	NAC2211BA	1
5.3 compressor/air pump		EAC1605	1
5.3 steering pump		EAC1323	1
5.3 cooling fan		C43070	1
6.0 alternator		NAC2211BA	1
6.0 compressor/air pump		NAB4705AA	1
6.0 steering pump		EAC1323	1
6.0 cooling fan		C43070	1
15. Thermostat			
4.0		EBC3621	1
5.3/6.0	82 degree	EBC3576	2
	88 degree	EBC3577	2
16. Housing			
4.0 to Engine no 142215		EAC6140	1
4.0 from engine 142216		NBB2251BA	1
17. Cover		EBC10345	1
18. O-ring		EAC8999	1
19. Temperature sensor			
to engine no 101198		DBC3728	1
from engine 101199		LHE1600AA	1
20. Temperature transmitter		DAC11079K	1
21. Thermostat cover			
5.3	RH	EBC10203	1
	LH	EBC10220	1
6.0	RH	EBC10203	1
	LH	EBC10253	1
22. Thermostat gasket			
5.3/6.0			
RH	(4 hole fixing)	EBC8330	1
LH	(3 hole fixing)	EBC8331	1
23. Temperature sensor/thermal switch			
5.3		DAC4737	1
6.0		DBC12183	1
24. Sealing washer		C2296/3	1
25. Temperature transmitter		DAC11079K	1
26. Temperature switch		EAC3762	1
27. Washer		C229620	1
28. Thermal vacuum valve		EBC4599	1
29. Vacuum switch valve		EBC3427	1
30. Sealing washer		C22468	1
31. Temperature sensor			
5.3/6.0 to engine 11950		DBC3728	1
6.0 from engine 11951		LHE1600AA	1
32. Sealing washer		C2296/3	1

Fuel System to 1991

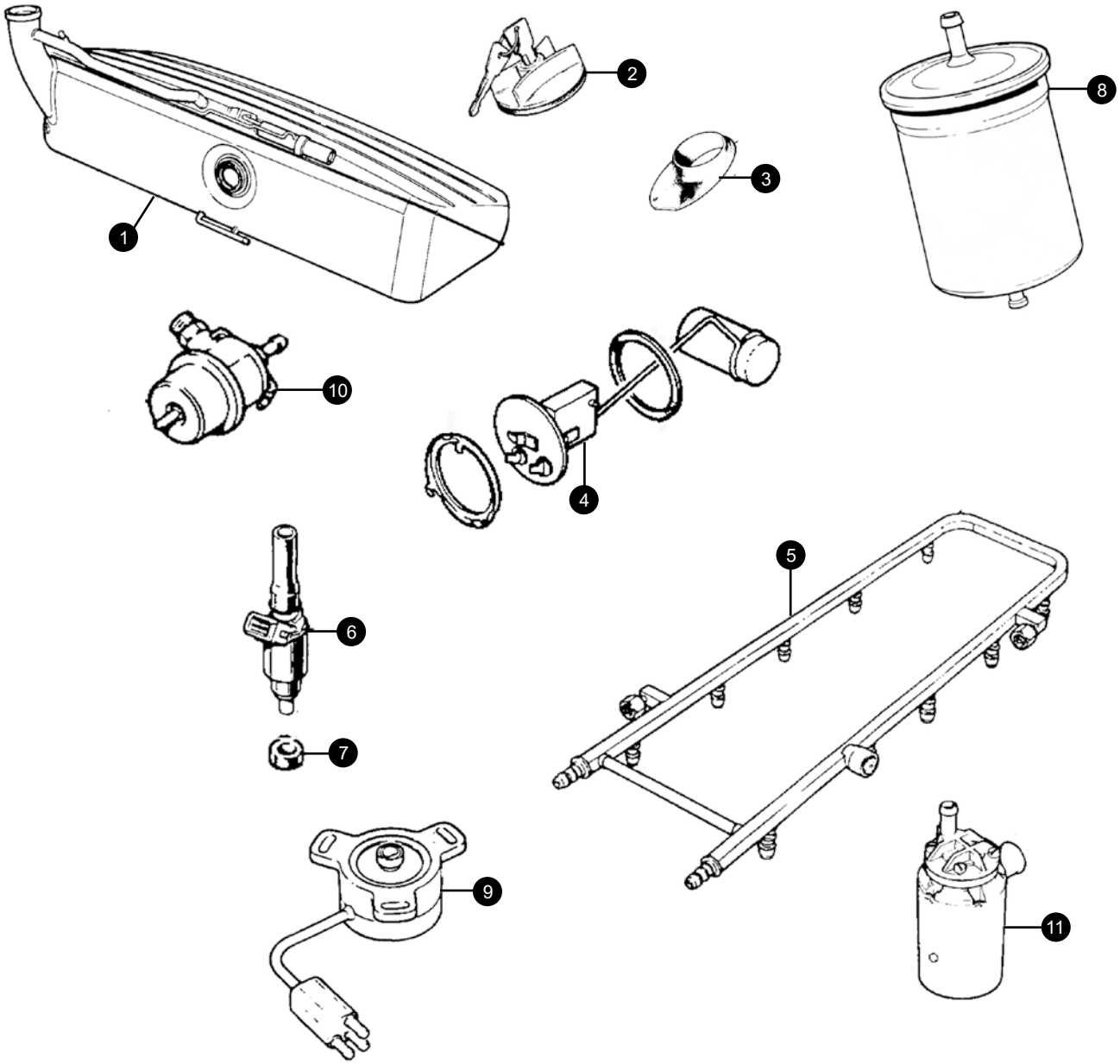

+44 1746 765432
sales.uk@sngbarratt.com

+33 385 201420
france@sngbarratt.com

018 01 833 833 (DE only)
sales.de@sngbarratt.com

+31 13 521 1552
sales.nl@sngbarratt.com

+1 800 452 4787
sales.usa@sngbarratt.com

1. Fuel tank

Coupe		
to VIN 147268	CBC4760/1	1
VIN 147269 on	CBC5525/1	1
Cabriolet	CBC4762/1	1
Convertible		
to VIN 161713	CBC6759	1
VIN161714 on	EBC8719/1	1

2. Locking fuel tank cap

Coupe	CAC3565	1
Cabriolet		
Leaded Fuel	BBC5936	1
Un-leaded Fuel		
to VIN139051	BBC5938	1
VIN 139052 on	BBC5291	1
Convertible		
Leaded Fuel	BDC7628	1
Un-leaded Fuel	BEC24035	1

3. Fuel tank cap gasket/grommet

Coupe		
to 2W4032 RHD/2W54659 LHD	BD44247	1
2W4033 RHD/2W54660 LHD on	CAC2403	1
Cabriolet & Convertible	HHC3105AA	1

4. Fuel level sender unit

Coupe	DAC5500	1
Cabriolet	DAC5525	1
Convertible	DAC10183	1
Locking ring for sender	ARA1501J	1
Seal for sender	ARA1502J	1

5. Fuel Rail

3.6		
to VIN139051	EAC6273	1
VIN139052 on	EAC9690	1
5.3		
to 8S16399	C44519	1
8S16400 to 8S18000	EAC2643	2
8S18001 to 8S44161 - cold start	EAC7941	1
8S44162 to 8S139051 - cold start	EAC8931	1
8S139052 on		
8S44162 to 8S71435 - non cold start	EAC8930	1
8S71436 on - non cold start	EBC3815	1
8S44162 on - non cold start	EBC3815	1

6. Fuel injectors

3.6		
to VIN 139051	EAC4866	6
VIN139052 on	EAC4867	6
5.3		
to 8S16399	C45675	12
8S16400 to 8S18000	ERC3620	12
8S18001 on		
short hose type	EAC7874	10
long hose type	EAC7875	2

7. Injector o-ring

3.6		EAC5901	6
5.3	small	EAC2415	12
	large	EAC2414	12

8. Fuel filter

3.6	EAC3112	
5.3 to VIN104147 (under bonnet)	EAC1498	1
5.3 VIN104148 on (in boot)	EAC3112	1

9. Throttle potentiometer

3.6		
to 9DPAMA103567	EAC2670	1
9DPAMA103568 on	EAC7341	1
5.3		
to 8S18000	C43031	1
8S18001 to 8S61794	EAC2670	1
8S61795 on	EAC9634	1

10. Fuel pressure regulator

3.6		
to 9DPAMA103612	EAC4864	1
9DPAMA103613 to VIN139051	EAC7520	1
VIN139052 to 8S180511	EBC2606	1
8S180512 on	EBC2806	1
5.3		
to 8S16399	C42122	2
8S16400 to 8S18000	EAC1284	2
8S18001 on - inlet	EBC2606	1
8S18001 on - outlet	EAC4864	1

11. Fuel pump

to VIN105047	CAC2026	1
VIN105048 on	CBC5657	1

Fuel System 1991 on

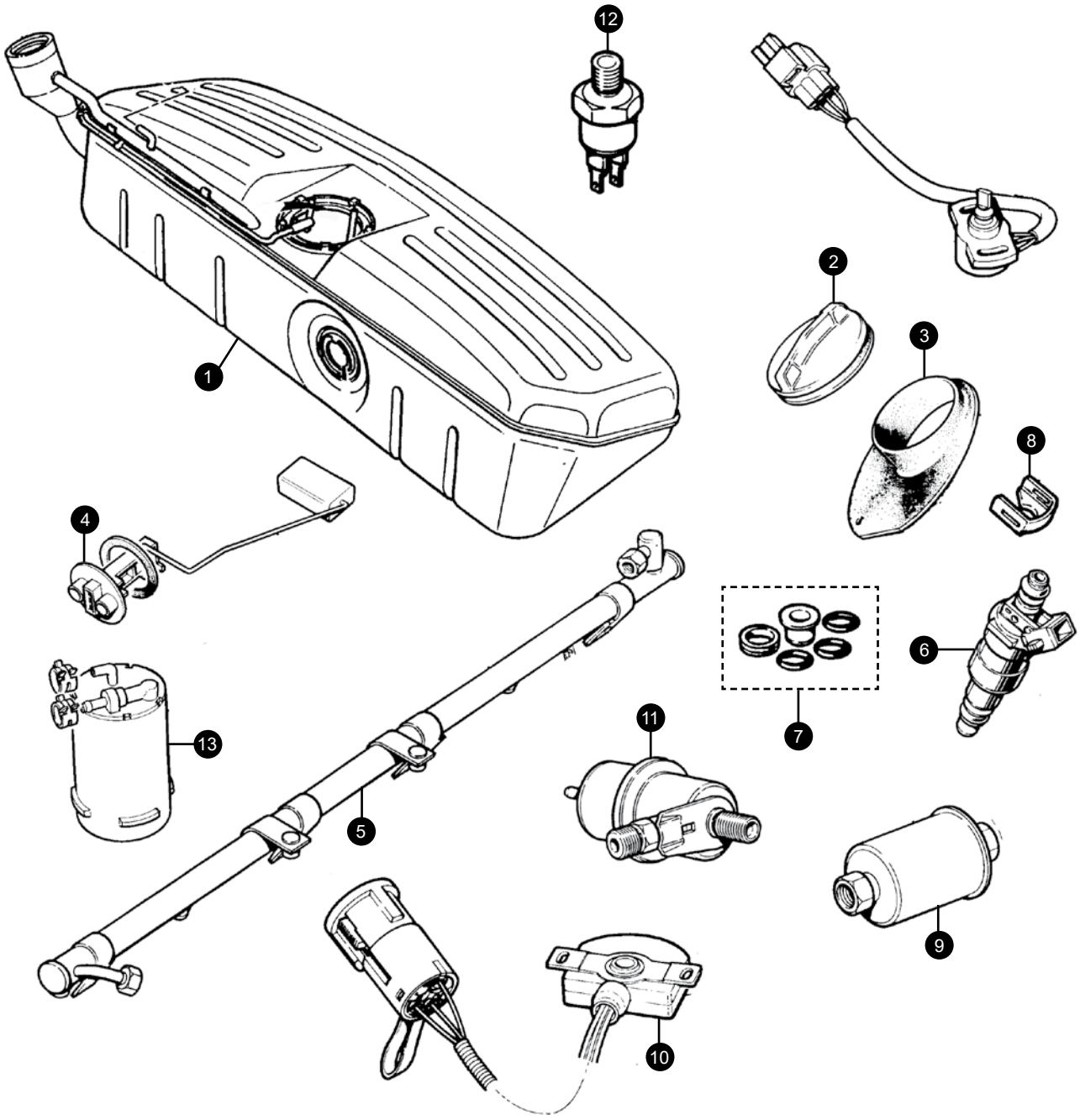

+44 1746 765432
sales.uk@sngbarratt.com

+33 385 201420
france@sngbarratt.com

018 01 833 833 (DE only)
sales.de@sngbarratt.com

+31 13 521 1552
sales.nl@sngbarratt.com

+1 800 452 4787
sales.usa@sngbarratt.com

1. Fuel tank

Coupe

4.0/5.3	to VIN 188104	EBC113751	1
4.0	VIN 88105 to 194774	NHF5908EA	1
6.0	to 194774	NHC5908CB1	1
6.0	from 194775	NHF5908BA	1

Convertible

4.0/5.3 Convertible to 188104	EBC93161	1
4.0 Convertible 188105-194774	NHE5908FA1	1
4.0 from 194774 (convertible)	NHE5980FC1	1
6.0 Convertible 188105-194774	NHC5908DC1	1
6.0 Convertible from 194775	NHF5908DA	1

2. Fuel tank cap

Coupe

to 194774	CBC6027	1
from 194775	NJD5942BB	1

Convertible

Complete Assembly	BEC24034	1
Spring	AEU1466	1
Seal & retainer	AEU4174	1
Gasket	HHC3105AA	1

3. Fuel tank cap grommet

Coupe

to VIN 192516	CBC8517	1
from VIN 192767	EBC8767	1

4. Fuel level sender unit

Coupe	DAC11189	1
Convertible	DAC11188	1
Lock ring for sender	ARA1501J	1
Sealing ring for sender	ARA1502J	1

5. Fuel Rail

4.0	to VIN 194774	EBC3679	1
	from VIN 194775	NBD3400BB	1
5.3		EBC8264	1
6.0		EBC3919	1

6. Fuel Injectors

4.0

to VIN 185819	EAC4866	6
from VIN 185820 to 194774	EBC4430	6
from VIN 194775	DBC10423	6
5.3/6.0	EBC2409	12

7. Injector O'ring

4.0 (set of 6)	EBC8492	1
5.3/6.0	EBC2207	1

8. Injector to fuel rail clip

4.0	EBC8357	6
5.3/6.0	EAC4579	12

9. Fuel filter NMD6091AC 1

10. Throttle potentiometer

5.3	DAC7427	1
6.0	DBC2626	1

11. Fuel pressure regulator

5.3	EBC3387	1
6.0	NAB3443AA	1

12. Thermal switch

5.3/6.0 DAC10335 1

13. Fuel pump

4.0 coupe to 188104	EBC11365	1
4.0 convertible to 194774	EBC11365	1
5.3 coupe/convertible to 188104	EBC11365	1

Please note that original part came with filter and insulator attached but the above is pump only.

4.0 coupe from 188105	JLM12204	1
4.0 convertible from 194775	JLM12204	1
6.0 coupe/convertible from 194775:	JLM12204	1

Please note that JLM12204 is complete with filter and insulator, JLM12204C is the pump only.

6.0 LITRE-COUPE/CONVERTIBLE-FROM (V)188105 TO (V)194774

LH	NMD6013BA	1
RH	NMD6013CA	1

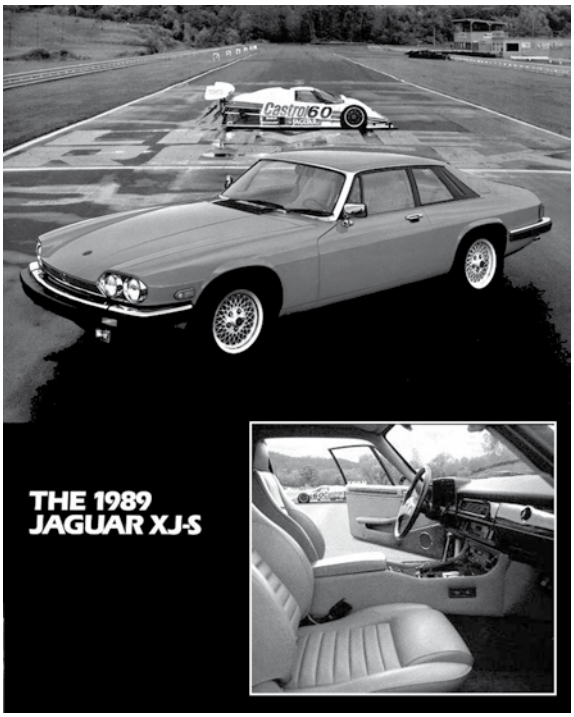

Exhaust System

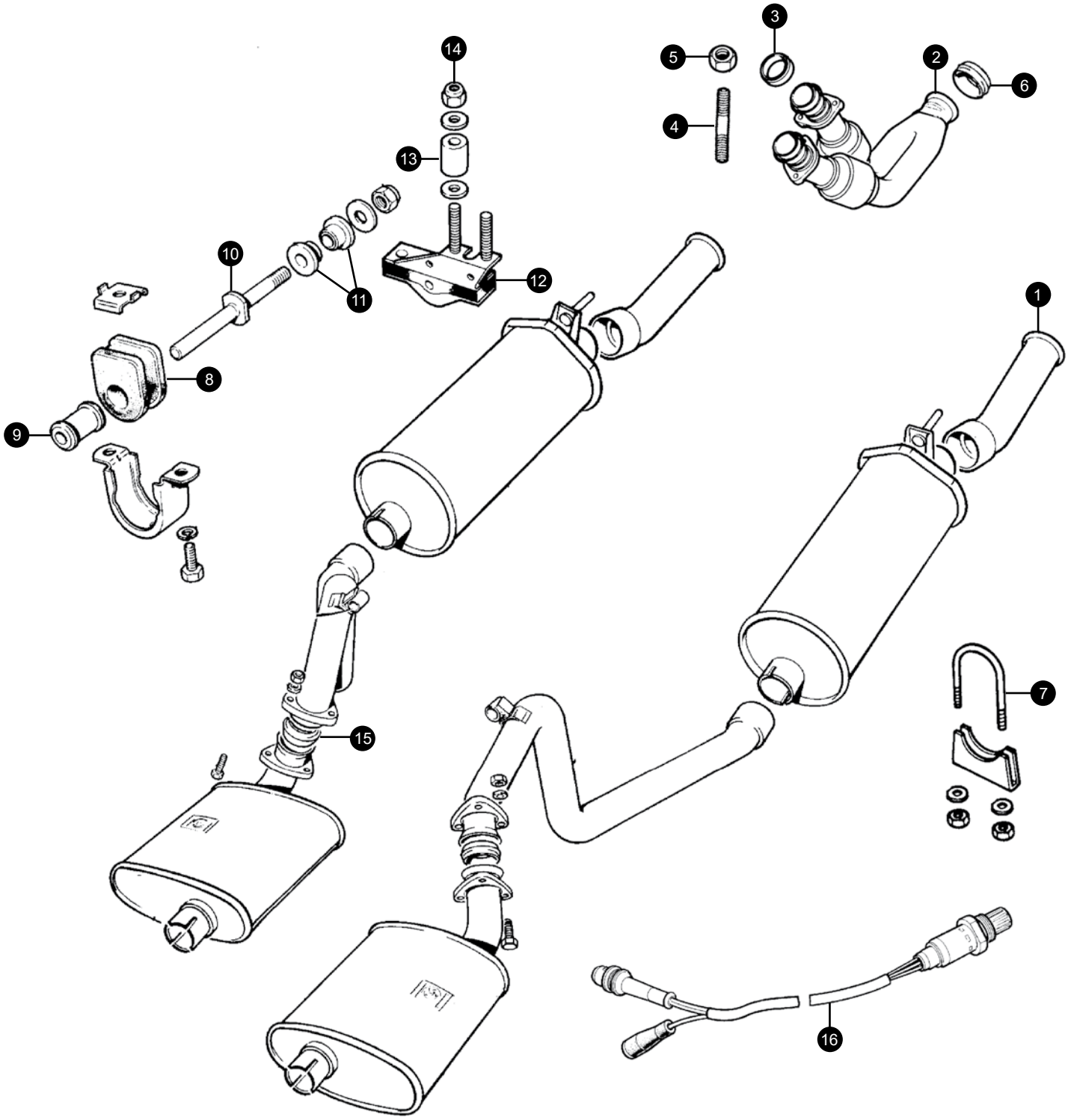

+44 1746 765432
sales.uk@sngbarratt.com

+33 385 201420
france@sngbarratt.com

018 01 833 833 (DE only)
sales.de@sngbarratt.com

+31 13 521 1552
sales.nl@sngbarratt.com

+1 800 452 4787
sales.usa@sngbarratt.com

Complete Stainless Steel Exhaust Systems

V12 5.3 to 1991 (Bell Exhausts)		
(No front pipes or tail pipes)	BSSJR029	1
V12 6.0 1991 on	Please call	
3.6 to 1991 (no front pipes)	QSSJR037	1
4.0 to 1993 VIN 185819		
(from catalytic converter rearwards)	QSSJR537	1

We are constantly introducing new systems to our range, please contact us to see if we stock a system for your car.

1. Tailpipe trims		
RH (all models except 6.0)	CAC6068	1
LH (all models except 6.0)	CAC6069	1
6.0 to VIN 194774	EBC10246	2
6.0 VIN 194775 on	NNE6723AA	2
2. Front pipes		
V12 5.3 to 1991	RH	
BSJR234		1
	LH	
BSJR235		1
V12 6.0 1991 on	RH	
NHC6700AA		1
	LH	
NHC6701AA		1
3.6 to 1991	CBC2521	1
4.0 1991 on (non catalytic converter)	EBC4920	1
4.0 1991 on (with catalytic converter)		
to VIN194774	JLM20704	1
VIN 194775 on	NBC6711CC	1
3. Downpipe O'rings	EBC9388	2/4
4. Downpipe stud	EAC3832	4/8
5. Downpipe brass nut	C17916	4/8
6. Interpipe metal sealing olive		
4.0/3.6	CAC4336	1
5.3/6.0	C35401	1
7. Exhaust clamps		
41mm	GEX9005	A/R
45mm	ECL45	A/R
48mm	GEX9008	A/R
52mm	ECL52	A/R
54mm	ECL54	A/R
58mm	ECL58	A/R
60mm	ECL60	A/R
8. Axle pipe/rear silencer mounting rubber		
to VIN 109446	C45014	2
VIN 109447 on	EBC4499	2
9. Axle pipe mounting insulator		
to VIN 109446	C38330	2
VIN 109447 on	CAC2750	2
10. Axle pipe mounting rod		
to VIN 109446	CAC3103	2
VIN 109447 on (not 6.0)	CAC3103	2
11. Axle pipe mounting rod insulator collar		
All models except 6.0	C44083	4
12. Rear silencer mounting	CBC5451	2
13. Distance piece	C19706	4
14. Nut	JLM9684	4
15. Overaxle pipe sealing olive	CBC4131	2
16. Heated oxygen (LAMBDA) sensor		
All models to VIN190527	DAC6907	1
4.0 VIN 190528 to 194774	DBC10744	A/R
4.0 VIN 194775 to 195695	DBC10862	A/R
4.0 VIN 195696 on		
front	LHE1682AA	A/R
rear (emmission A only)	LHE1682BA	A/R
6.0	DBC10744	A/R

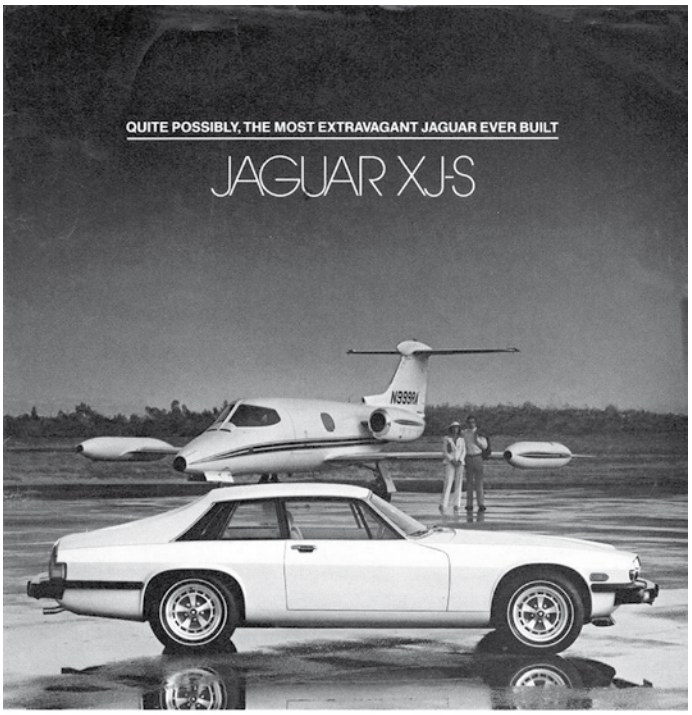

Jaguar engineers and designers have always gone to great lengths in their pursuit of excellence. With the latest great Jaguar, the S-type, they've gone even further. It is extravagant in the degree to which it surpasses the limits of conventional luxury cars. For the XJ-S achieves, very gracefully, an almost magical blending of great luxury with out-of-the-ordinary handling and response. It may well be the best-handling four-passenger car in the world.

The S-type has fully-independent suspension, four-wheel power disc brakes, rack and pinion steering, and the velvet-smooth, immensely responsive electronically fuel-injected Jaguar V-12 engine. In its first Trans Am season, an S-type won five Category I victories.

Yet the S-type is surpassingly luxurious too: it is silent in motion and equipped with thoughtful accessories such as thermostatically-regulated heat and air conditioning, stereo AM/FM radio and tape system, automatic transmission and steel-belted radial tires. In fact, so completely equipped is the XJ-S that there are no factory options at all.

Perhaps *Road & Track* summed it up best when it said of the S-type: "The emphasis is on refinement, complete silence, luxury, comfort and general opulence, and it will run the pants off a 450SLC." Extravagant? Not for the Jaguar S-type. Drive it soon.

For the name of the Jaguar dealer nearest you, call these numbers toll-free: (800) 447-4700, or, in Illinois, (800) 322-4400.

BRITISH LEYLAND MOTORS INC., LEONIA, NEW JERSEY 07605.

Body Panels

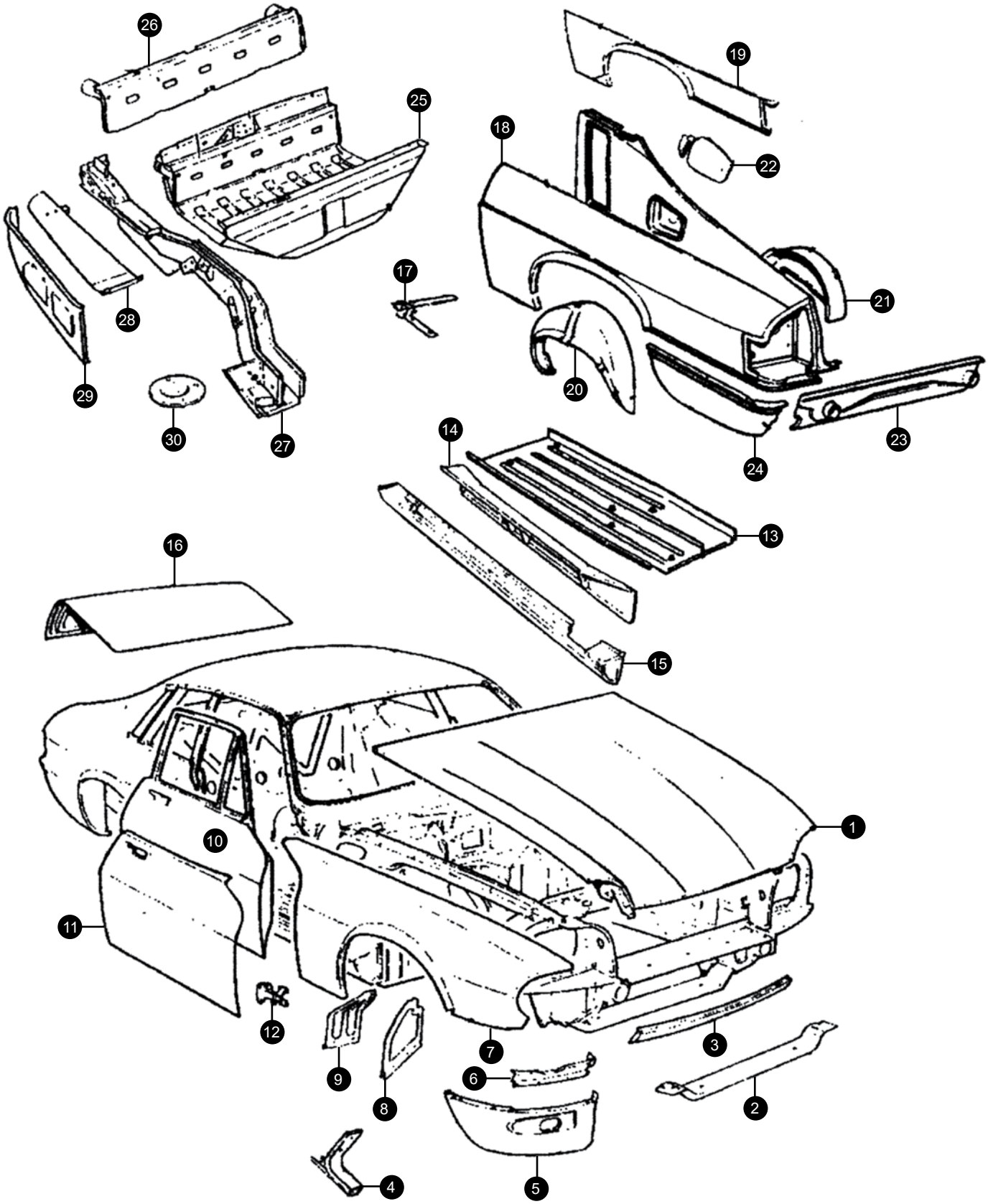
26
25
19
18
22
17
21
28
29
20
30
27
14
23
24
13
16
15
1
10
11
12
7
3
9
6
8
2
4
5

1. Bonnet			
3.6	**to 179736**	**CBP303**	**1**
5.3	**to 179736**	**RTC1530**	**1**
	179737 on	**BHC1973**	**1**
	189894 to 194774	**BHC3055**	**1**
	194775 on	**FHE3005AA**	**1**
2. Front crossmember		**CBP313**	**1**
3. Front lower panel			
	to 179736	**RTC1531**	**1**
	179737 to 188104	**BHC2180**	**1**
4. Bonnet hinge		**BHC2783**	**2**
5. Front lower quarter panel			
to 184573	**RH**	**RTC1544**	**1**
	LH	**RTC1545**	**1**
184574 on	**RH**	**BHC2568**	**1**
	LH	**BHC2569**	**1**
6. Front lower wing extension			
to 188104	**RH**	**BHC2112**	**1**
	LH	**BHC2113**	**1**
188105 to 191497 coupe	**RH**	**BHC2668**	**1**
188105 to 191445 conv	**LH**	**BHC2113**	**1**
191498 on coupe	**RH**	**BHC2112**	**1**
191446 on conv	**LH**	**BHC2113**	**1**
7. Front wing			
to 179736	**RH**	**BHC1810**	**1**
	LH	**BHC1811**	**1**
179737 to 188104	**RH**	**BHC1812**	**1**
	LH	**BHC1813**	**1**
188105 to190257	**RH**	**BHC2544**	**1**
	LH	**BHC2545**	**1**
190258 on	**RH**	**BHC2790**	**1**
	LH	**BHC2791**	**1**
8. Front wheelarch baffle panel			
	RH	**BEC16114**	**1**
	LH	**BEC16115**	**1**
9. Front wheelarch stoneguard			
FHC/Cabriolet	**RH**	**BEC23132**	**1**
	LH	**BEC23133**	**1**
Convertible	**RH**	**BEC23130**	**1**
	LH	**BEC23131**	**1**
10. Door assembly			
FHC/Cabriolet to 179736	**RH**	**RTC1532**	**1**
	LH	**RTC1533**	**1**
FHC/Cabriolet 179737 on	**RH**	**JLM10476**	**1**
	LH	**JLM10477**	**1**
Spindle/Tibbe key	**RH**	**JLM12350**	**1**
	LH	**JLM12351**	**1**
Convertible to 179736	**RH**	**BJC1536**	**1**
	LH	**BJC1537**	**1**
Convertible 179736 on	**RH**	**JLM10478**	**1**
	LH	**JLM10479**	**1**
Spindle/Tibbe key	**RH**	**JLM12352**	**1**
	LH	**JLM12353**	**1**
11. Door skin			
FHC/Cabriolet to 179736	**RH**	**RTC1534**	**1**
	LH	**RTC1535**	**1**
FHC/Cabriolet 179737 on	**RH**	**BHC1524**	**1**
	LH	**BHC1525**	**1**
Spindle/Tibbe key	**RH**	**JLM11022**	**1**
	LH	**JLM11023**	**1**
Convertible to 179736	**RH**	**BJC1834**	**1**
	LH	**BJC1835**	**1**
Convertible 179736 on	**RH**	**BHC1858**	**1**
	LH	**BHC1859**	**1**
Spindle/Tibbe key	**RH**	**JLM11024**	**1**
	LH	**JLM11025**	**1**
12. Door hinge			
Upper	**RH**	**FHE3042AA**	**1**
	LH	**FHE3043AA**	**1**
Lower	**RH**	**RTC1669**	**1**
	LH	**RTC1670**	**1**
13. Floorpan to 179736	**RH**	**XJS604RP**	**1**
	LH	**XJS605RP**	**1**
14. Inner sill			
FHC/Cabriolet to 179736	**RH**	**BHC1914**	**1**
	LH	**BHC1915**	**1**
FHC 179737 to 198334	**RH**	**BHC1914**	**1**
	LH	**BHC1915**	**1**
FHC 198335 on	**RH**	**FHE3610AA**	**1**
	LH	**FHE3611AA**	**1**
Convertible	**RH**	**JLM1431**	**1**
	LH	**JLM1432**	**1**
15. Outer sill			
FHC/Cabriolet to 179736	**RH**	**RTC1627**	**1**
	LH	**RTC1628**	**1**
FHC/Cabriolet 179737 on	**RH**	**BHC1898**	**1**
	LH	**BHC1899**	**1**

Convertible to 179736	RH	BJC1412	1
	LH	BJC1413	1
Convertible 179736 on	RH	BHC1434	1
	LH	BHC1435	1
16. Boot lid			
FHC/Cabriolet to 179736		CBP318	1
FHC/Cabriolet 179737 on		FHC3019AA	1
Convertible		BJC1524	1
17. Boot lid hinge			
FHC/Cabriolet to 179736	RH	RTC1673	1
	LH	RTC1674	1
FHC 179737 on		BHC1223	2
Convertible		BBC7654	2
18. Rear wing			
FHC to 179736	RH	RTC1635	1
	LH	RTC1636	1
FHC 179737 on	RH	BHC2540	1
	LH	BHC2541	1
Cabriolet	RH	BAC8276	1
	LH	BAC8277	1
Convertible to 179736	RH	BJC1516	1
	LH	BJC1517	1
Convertible 179737 to 188104	RH	BHC1908	1
	LH	BHC1909	1
Convertible 188105 on	RH	BHC2630	1
	LH	BHC2631	1
19. Rear lower wing repair			
to 179736	RH	MRXJ035SRH	1
	LH	MRXJ035SLH	1
20. Rear outer wheelarch			
FHC/Cabriolet to 179736	RH	RTC1638	1
	LH	RTC1639	1
Convertible to 179736	RH	BJC1414	1
	LH	BJC1415	1
Coupe & convertible 179737 to 188104	RH	BJC1414	1
	LH	BJC1415	1
Coupe & convertible 188105 on	RH	BHC1176	1
	LH	BHC1177	1
21. Rear inner wheel arch			
FHC/Cabriolet to 179736	RH	JLM742	1
	LH	JLM743	
Convertible to 179736	RH	BHC1438	1
	LH	BHC1439	1
Coupe & convertible 179737 to 188104	RH	BHC1438	1
	LH	BHC1439	1
Coupe & convertible 188105 on	RH	BHC2082	1
	LH	BHC2083	1
22. Fuel filler lid			
FHC to 1987		RTC1633	1
1987 to 179736		CBP221	1
179737 on		BHC1936	1
23. Rear lower valance			
All models to 188104		RTC1637	1
All models 188105 on		JLM12224	1
24. Rear lower quarter valance			
to 188104	RH	BHC1374	1
	LH	BHC1375	1
188105 on	RH	JLM12226	1
	LH	JLM12227	1
25. Boot floor assembly			
All models to 179736		RTC1594	1
All models 179737 to 185819		JLM10480	1
All models 185820 to 188104		JLM11119	1
All models 188105 on		JLM11284	1
26. Rear bumper crossmember			
All models to 188104		RTC1590	1
All models 188105 on		BHC1553	1
27. Rear side member			
FHC/Cabriolet to 179736	RH	RTC1599	1
	LH	RTC1600	1
Convertible to 179736	RH	BJC1506	1
	LH	BJC1507	1
All models			
179737 to 184573	RH	BHC1720	1
184574 to 188104	RH	BHC2808	1
188105 on	RH	BHC2520	1
179737 to 188104	LH	BHC1721	1
188105 on	LH	BHC2521	1
28. Boot side panel			
to 188104	RH	RTC1595	1
	LH	RTC1596	1
188105 on	RH	BHC2276	1
	LH	BHC2277	1
29. Closing panel	RH	RTC1597	1
	LH	RTC1598	1
30. Radius arm mounting cup		JS254	2

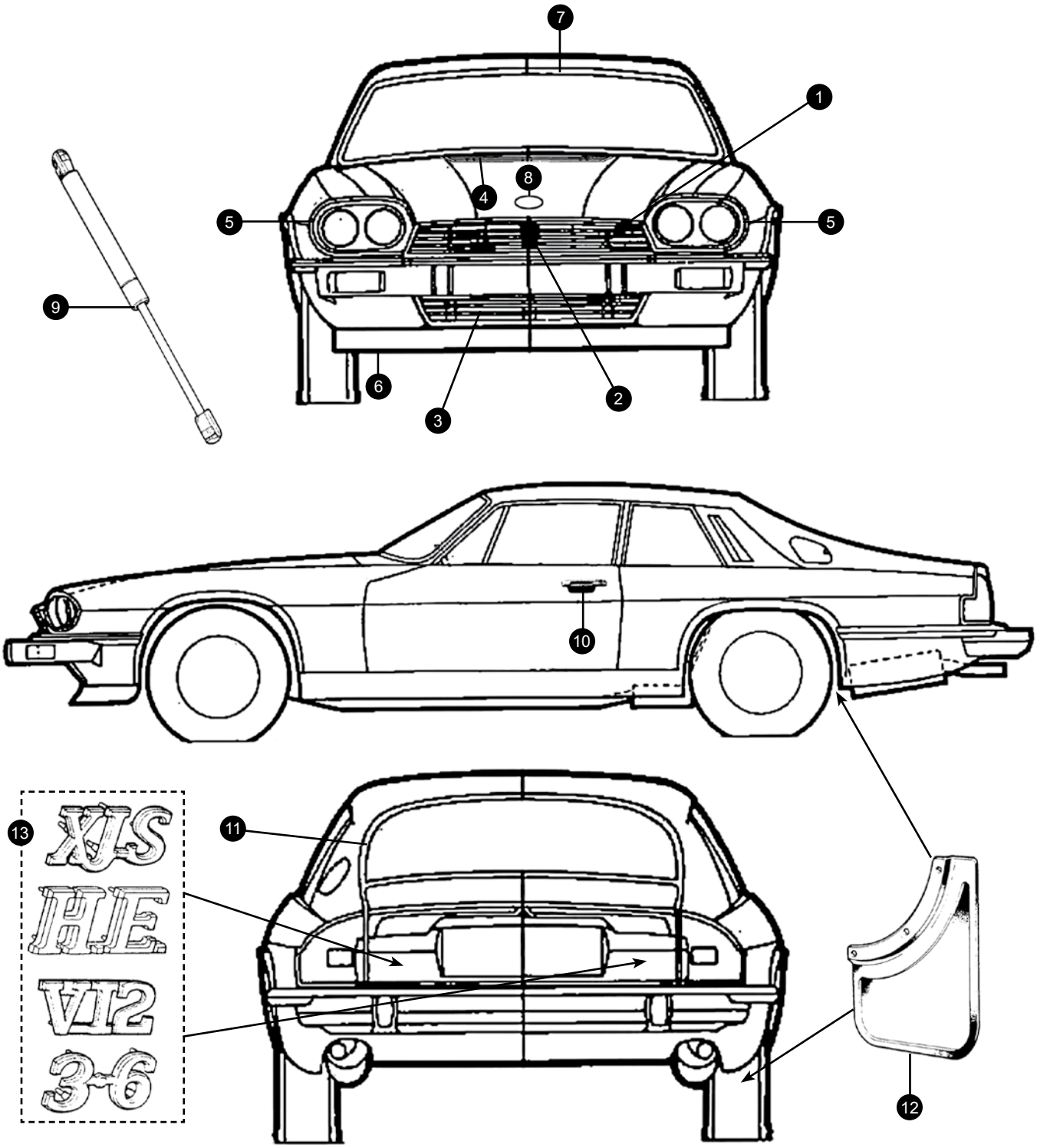
7
1
8
4
5
5
9
6
2
3
10
13
XJS
HE
V12
3·6
11
12

Body Fittings

1. Upper Grille			
to VIN 179736		BEC11284	1
VIN 179737 on		BEC10966	1
2. Grille Badge			
3.6 (S)		BAC5764	1
V12		BD44533	1
3. Lower grille		BEC21572	1
4. Scuttle grille			
to VIN139051		BAC3719	1
VIN139052 to 152510		BCC2695	1
VIN 152511 on		JLM10625	1
5. Headlamp chrome surround trim			
European single headlamp			
Non headlamp wash	RH	BAC5416	1
	LH	BAC5417	1
Headlamp wash	RH	BAC4486	1
	LH	BAC4487	1
USA twin headlamp	RH	DAC2136	1
	LH	DAC2137	1
6. Lower front spoiler			
O.E.		BEC13168	1
GRP		BEC13168*	1
7. Windscreen surround chromes			
Upper			
to VIN 179736		BD44237	1
coupe VIN 179737 to 186966		BEC8124	1
coupe VIN 186967 on		GHB8860AA	1
convertible VIN 179737 on		BEC23222	1
Lower			
to VIN 179736		BD44243	1
coupe VIN 179737 to 186966		BEC17412	1
coupe VIN 186967 on		BEC25707	1
convertible VIN 179737 on		BEC1460	1
RH side			
to VIN 179736		BDC7218	1
coupe VIN 179737 to 186966		BEC17406	1
coupe VIN 186967 on		GHB8852AA	1
convertible VIN 179737 on		BEC25314	1
LH side			
to VIN 179736		BDC7219	1
coupe VIN 179737 to 186966		BEC17407	1
coupe VIN 186967 on		GHB8853AA	1
convertible VIN 179737 on		BEC25315	1
8. Bonnet badge			
Black style		BAC3838	1
Gold style		BEC4362	1
Badge seating mat for above		BEC3839	1
9. Bonnet gas strut			
to VIN 184671		BD48027	2
VIN184672 on	locking	BEC15544	1
	non locking	BEC13515	1
Boot lid gas strut (XJRS only)		GHC3800AA	2
10. Door handles			
to VIN 105380	RH chrome	BD44889	1
	LH chrome	BD44890	1
VIN 105381 to 148781			
	RH black	BBC5932	1
	LH black	BBC5933	1
VIN 148782 on	RH flat key	BBC6622	1
	LH flat key	BBC6561	1
	RH spindle key*	BEC8976	1
	LH spindle key*	BEC8977	1
* Barrel repair kit for above			
	RH	JLM10790	1
	LH	JLM10791	1
11. Rear screen surround chromes (coupe only)			
to VIN 179736			
Upper		BD44394	1
Lower		BD44385	1
Corners		BD47931	2
VIN 179737 on			
RH upper		BEC3084	1
LH upper		BEC3085	1
Centre joining clip		BEC23512	1
Lower		BEC3086	1
12. Mudflaps (complete with fixings)			
Front			
to VIN 179736		JLM9773	1 set
Rear			
to VIN 179736		JLM10673	1 set
13. Rear badges			
Pre H.E. separate chrome letters			
	"X"	BD36076	1
	"J"	BD36077	1
	"-"	BD47267	1
	"S"	BD47703	1
H.E. plastic style badges (to VIN 179736)			
	"XJS"	BCC3665	1
	"XJS" USA (gold)	BEC4741	1
	"V12"	BEC4717	1
	"H.E."	BAC3874	1
	"3.6"	BCC3668	1
Facelift (VIN 179737 on)			
	"XJS" to VIN 190527	BEC22057	1
	"XJS" VIN 190528 on	HHB5982BA	1
	"V12" to VIN 190527	BEC22058	1
	"V12" VIN 190528 on	HHB5982CA	1
	"JAGUAR" to VIN 190527	BEC22056	1
	"JAGUAR" 190528 on	HHB5982AA	1

+44 1746 765432
sales.uk@sngbarratt.com
+33 385 201420
france@sngbarratt.com
018 01 833 833 (DE only)
sales.de@sngbarratt.com
+31 13 521 1552
sales.nl@sngbarratt.com
+1 800 452 4787
sales.usa@sngbarratt.com

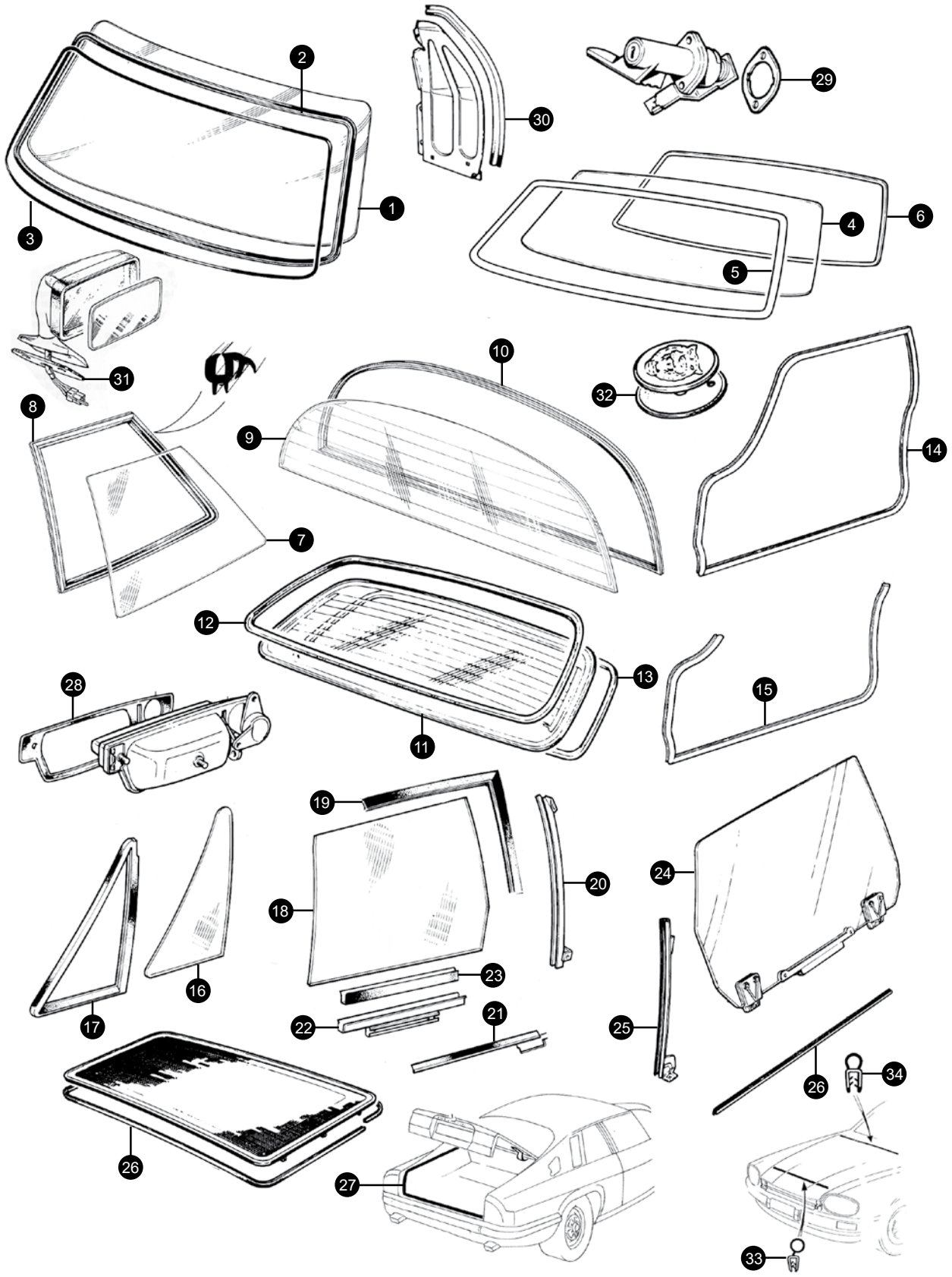
1
2
3
4
5
6
7
8
9
10
11
12
13
14
15
16
17
18
19
20
21
22
23
24
25
26
26
27
28
29
30
31
32
33
34

Windscreen Glass & Seals- Coupe & Cabriolet

1. Windscreen glass to VIN 179736		
Clear	BD44231	1
Tinted	BD44323	1
Graduated tint	BD44233	1
Windscreen glass VIN 179737 on		
Clear	BEC10944	1
Tinted to VIN186966	BCC9806	1
Tinted VIN 186967 to 190528	BEC25409	1
Tinted VIN 190529 to 221981	GHC8804AA	1
Tinted VIN 221982 on	GHD8804AA	1
2. Windscreen sealing rubber		
to VIN 139051	BDC7178	1
VIN 139052 to 179736	BDC7178	1
VIN 179737 to 186966*	BEC9535	1
VIN 186967 on*	BEC24436	1
*** Mastic retention dam for above**		
VIN 179737 to 186966	BEC7083	1
VIN 186967 on	BEC14882	1
3. Sealing rubber insert strip	BD15466/2	1

Windscreen Glass & Seals- Convertible

4. Windscreen glass		
Clear	BBC6908	1
Tinted	BEC22248	1
5. Windscreen sealing rubber		
to VIN 163579	BEC6599	1
VIN 163580 to 186966	BEC6599	1
VIN 186967	BEC24436	1
6. Mastic retention dam	BEC7083	1
7. Coupe rear quarter glass to VIN 179736		
Clear LH	BD44488	1
Tinted LH	BD44488/1	1
Clear RH	BD44487	1
Tinted RH	BD44487/1	1
Coupe rear quarter glass VIN 179737 on		
LH	BEC16435	1
RH	BEC16434	1
8. Coupe rear quarter glass seal to VIN 179736		
LH	BD46764	1
RH	BD46763	1
Coupe rear quarter glass seal VIN 179736 on		
Front	BEC10989	2
Rear	BEC10988	2
Lower support strip	BEC9096	2
9. Coupe rear windscreen to VIN 179736		
Clear heated	BD44390	1
Tinted	BD44391	1
Tinted heated	BEC5406	1
Coupe rear windscreen VIN 179737 on		
With high mounted stoplamp	BEC6351	1
Without high mounted stoplamp	BEC6352	1
10. Coupe rear windscreen seal		
to VIN 179736	BD44393	1
VIN 179737 to 191494*	BEC21332	1
VIN 191495 on*	GHD9024AA	1
*** Mastic retention dam for above**	BEC9530	1
11. Convertible rear windscreen		
Convertible	BBC8243	1
Convertible 2+2*	BEC24513	1
*** retainer for above**	BEC24550	1
12. Convertible rear screen seal		
to VIN 175010	BEC10035	1
VIN 175011 on	BEC10035	1
13. Mastic retention dam	BEC1728	1
14. Coupe door seal		
to VIN 179736	BAC6019	2
LH VIN 179737 on	BEC24883	1
RH VIN 179737 on	BEC24882	1
15. Convertible door seal		
LH to VIN 179736	HHE5301AA	1
RH to VIN 179736	BEC14812	1
LH VIN 179737 on	HHE5301AA	1
RH VIN 179737 on	HHE5300AA	1

Coupe & cabriolet door glass and seals

16. Front quarter light glass		
to VIN 179736 only		
Clear LH	BD44094	1
Tinted LH	BD44094/1	1
Clear RH	BD44093	1
Tinted RH	BD44093/1	1
17. Front quarter light seal		
to VIN 179736 only	BD44773	2
18. Door glass		
to VIN 179736		
Clear LH	BD44024	1
Tinted LH	BD44024/1	1
Clear RH	BD44023	1
Tinted RH	BD44023/1	1
VIN 179737 to 193684		
LH	BEC22271	1
RH	BEC22270	1

VIN 193685 to 199128		
LH	GHD1001CA	1
RH	GHD1000CA	1
VIN 199129 on		
LH	GHD1001CB	1
RH	GHD1000CB	1
19. Door glass frame seal		
to VIN 179736 only	BBC6292	2
20. Door glass guide		
LH to VIN 179736	BD45935	1
RH to VIN 179736	BD45934	1
LH VIN 179737 on	BEC21957	1
RH VIN 179737 on	BEC21956	1
21. Door glass waist seal		
inner to VIN 179736	BD46458/1	2
outer to VIN 179736	BD46440/3	2
inner VIN 179737 on	BEC15862	2
LH outer to VIN 188439	BEC15569	1
RH outer to VIN 188439	BEC15568	1
LH outer VIN 188440 on	BEC23267	1
RH outer VIN 188440 on	BEC23266	1
22. Door glass lift channel		
to VIN 179736 only	BD46028	2
23. Door glass lift channel rubber		
to VIN 179736 only	BD4793710	2
<u>Convertible door glass and seals</u>		
24. Convertible door glass & carrier		
LH to VIN 165255	BEC7275	1
RH to VIN 165255	BEC7274	1
LH VIN 165256 to 179736	BEC7275	1
RH VIN 165256 to 179736	BEC7274	1
VIN 179737 to 193684		
LH	BEC25527	1
RH	BEC25526	1
VIN 193685 to 199128		
LH	GHD1001DA	1
RH	GHD1000DA	1
VIN 199129 on		
LH	GHD1001DB	1
RH	GHD1000DB	1
25. Convertible door glass waist seal		
inner to VIN 179736	BD46458/1	2
inner VIN 179737 on	BEC15862	2
outer LH to VIN 179736	BD464401	1
outer RH to VIN 179736	BDC4878	1
outer LH VIN179737 to 188439	BEC15571	1
outer RH VIN 179737 to 188439	BEC15570	1
LH outer VIN 188440 on	BEC23269	1
RH outer VIN 188440 on	BEC23268	1
26. Sunroof seal		
front	JLM412	1
rear	JLM413	1
27. Boot seal		
to VIN 179736	BBC4441/1	1
Coupe VIN 179737 on	HHE5372AA	1
Convertible VIN 179737 on	HHE5372BA	1
28. Door handle gasket		
LH to VIN 179736	BD45851	1
RH to VIN 179736	BD45850	1
LH VIN 179737 on (flat key type)	BEC8697	1
RH VIN 179737 on (flat key type)	BEC8696	1
LH VIN 179737 on (spindle key type)	BEC8978	1
RH VIN 179737 on (spindle key type)	BEC8977	1
29. Boot lock seal		
to VIN 179736 only	BD44164	1
30. Front wing stoneguard seals		
front all models	BBC4444	2
rear	BCC2614	2
31. Door mirror gaskets		
to VIN 179736	BDC9424	2
VIN 179737 on	HHE3422AA	2
32. Bonnet badge seal	BAC3839	1
33. Radiator crossmember seal	HJF5240AB	1
34. Rear bonnet seal	BEC9011	1

Bumpers

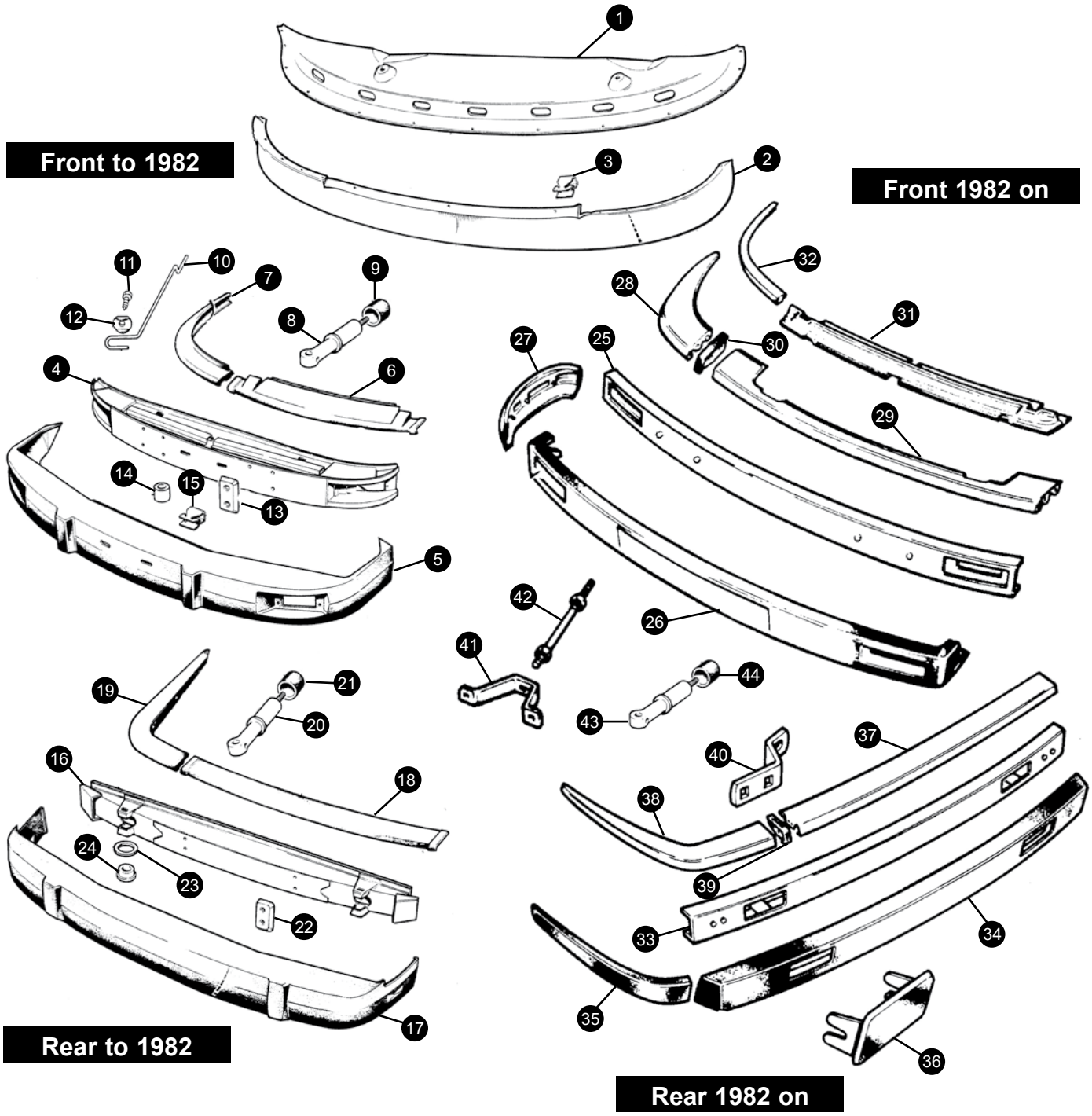

1. Undertray			
to 184573		BEC16739	1
184574 on		BEC15561	1
2. Front spoiler		BEC13168	1
3. Clip		BD21962	2
Front to 1982 Pre H.E.			
4. Armature		BD46731	1
5. Rubber cover			
European markets		BD46728	1
North American markets		BD45379	1
6. Centre finisher		BD46711	1
7. Side finisher	RH	BD46712	1
	LH	BD46713	1
8. Impact absorber		BD44680	2
9. Rubber		BEC14957	2
10. Attachment rod	RH	BD48329	1
	LH	BD48330	1
11. Screw		DAZ114/12C	2
12. Washer		BD48346	2
13. Tapping plate NAM markets		BD46734	2
14. Spacer		BAC1336	2
15. Clip		BD21962	11
Rear to 1982 Pre H.E.			
16. Armature			
Early		BD46751	1
Late		BD48258	1
17. Rubber cover			
Early		BD46715	1
Late		BD48264	1
18. Centre finisher		BD46714	1
19. Side finisher	RH	BD46685	1
	LH	BD46686	1
20. Impact absorber		BD44680	2
21. Rubber		BD44724	2
22. Tapping plate		BD46750	2
23. Spacer shim		BD44763	A/R
24. Spacer		BD45366	2
Front 1982 on H.E.			
25. Armature			
to VIN188104	Europe	BCC5120	1
	North America	BCC5121	1
VIN188105 on	Europe	BEC13462	1
	North America	BEC26652	1
26. Rubber cover			
to VIN179736	Europe	BAC1331	1
	North America	BAC1170	1
VIN179737 on	Europe	BEC14520	1
	North America	BEC5584	1

Bumper cover assembly VIN179737 on spoiler type (where fitted)		BEC13469XXX	1
27. Side capping			
European markets to VIN 179736			
	RH	BAC2934	1
	LH	BAC2935	1
European markets to VIN 179737 on			
	RH	BEC4604	1
	LH	BEC4605	1
North American markets all models			
	RH	BEC4122	1
	LH	BEC4123	1
28. Side finisher			
Power wash			
to VIN 183691	RH	BEC14680	1
	LH	BEC14681	1
VIN 183692 to 185819	RH	BEC14680	1
	LH	BEC20705	1
VIN 185820 to 188104	RH	BEC24476	1
	LH	BEC24477	1
VIN 188105 on	RH	BEC26634	1
	LH	BEC26635	1
Non power wash			
to VIN 183691	RH	BEC14678	1
	LH	BEC14679	1
VIN 183692 to 185819	RH	BEC14678	1
	LH	BEC14679	1
VIN 185820 to 188104	RH	BEC24474	1
	LH	BEC24475	1
VIN 188105 on	RH	BEC26638	1
	LH	BEC26639	1
29. Centre finisher			
to VIN 188104		BCC3435	1
VIN 188105 on		BEC26632	1
30. Jointing strip	RH	BAC3480	1
	LH	BAC3481	1
31. Plinth			
to VIN 188104		BEC20094	1
VIN 188105 on		BEC26657	1
32. Edge finisher		BEC10034	1

Rear 1982 on H.E.

33. Armature
European markets

to VIN 179736	BAC1338	1
VIN179737 on	BEC4139	1

North American markets

to VIN 179736	BAC3415	1
VIN 179737 on	BEC4129	1

34. Rubber cover
European markets

to VIN 179736	BAC1337	1
VIN 179737 on	BEC15478	1

North American markets

VIN to 179736	BAC1151	1
VIN 179737 on	BEC15479	1

35. Side capping
European & North American markets to VIN 179736

RH	BAC2928	LH	BAC2929	1

European markets VIN 179737 on

RH	BEC4640	LH	BEC4641	1

North American markets VIN 179737 on

RH	BEC4132	LH	BEC4133	1

36. Blanking plate
European markets only to VIN 179736 BAC1461 A/R

37. Centre finisher		BCC3434	1
38. Side finisher	RH	BEC4134	1
	LH	BEC4135	1
39. Jointing strip		BAC3479	2

40. Mounting bracket
European markets only to 179736

RH	BAC2936	LH	BAC2937	1

European markets only 179737 on

RH	BEC4140	LH	BEC4141	1

41. Fixing bracket

European markets only	Centre	BAC3505	2
	Side	BEC26286	2

42. Fixing bolt
European markets only BAC3074 2

43. Impact absorber
North American markets only BD48649 2

44. Strut bush
North American markets only BD44724 2

+44 1746 765432
sales.uk@sngbarratt.com
+33 385 201420
france@sngbarratt.com
018 01 833 833 (DE only)
sales.de@sngbarratt.com
+31 13 521 1552
sales.nl@sngbarratt.com
+1 800 452 4787
sales.usa@sngbarratt.com

THE JAGUAR SAINTS

A SHORT TIME LATER...

A FEW DAYS LATER AT THE JAGUAR CLUB DINNER & DANCE

Lamps

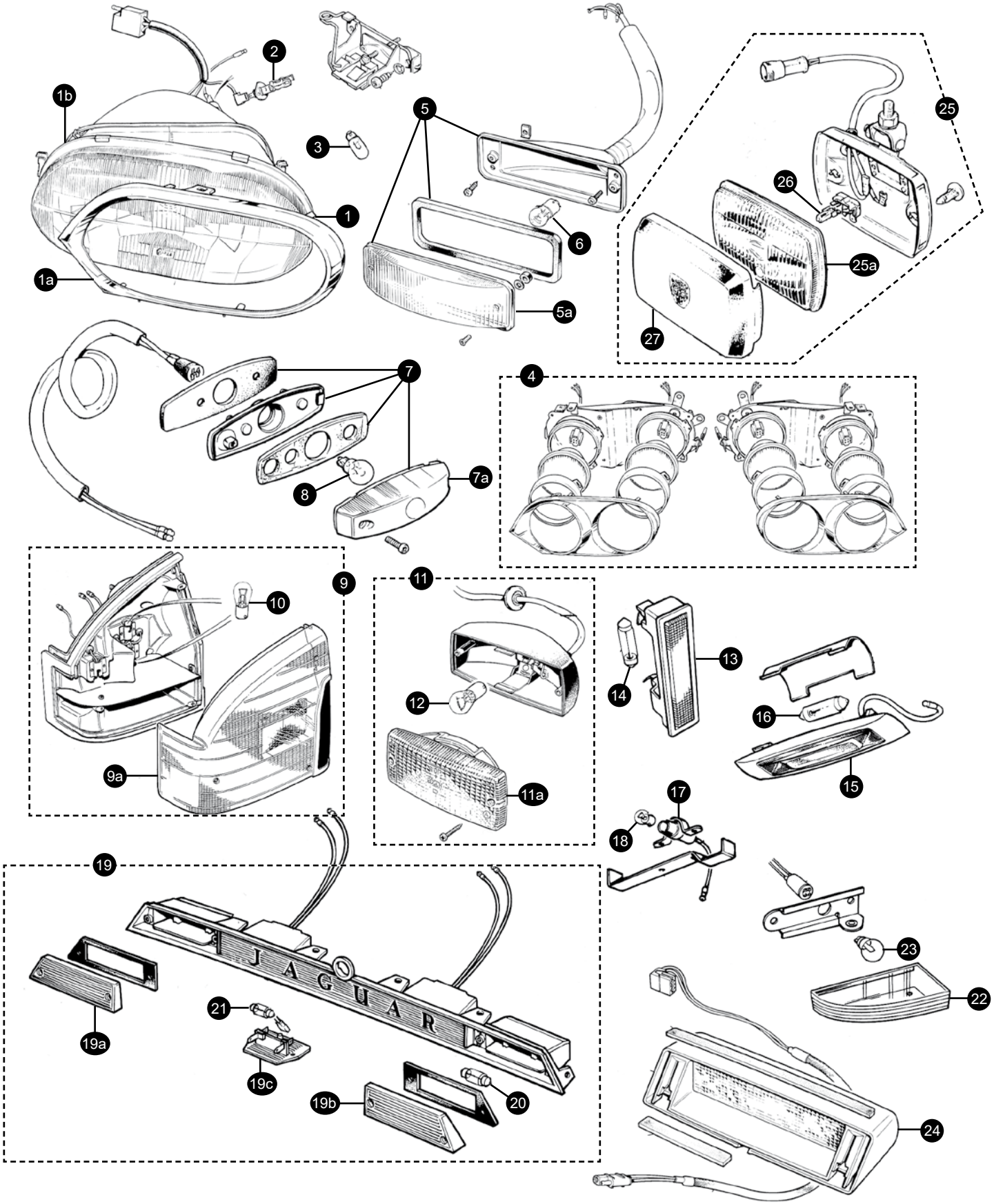

+44 1746 765432
sales.uk@sngbarratt.com

+33 385 201420
france@sngbarratt.com

018 01 833 833 (DE only)
sales.de@sngbarratt.com

+31 13 521 1552
sales.nl@sngbarratt.com

+1 800 452 4787
sales.usa@sngbarratt.com

1. European style single headlamp
to VIN 179736

RHD	LH	JLM2265	1
	RH	JLM2266	1
LHD	LH	JLM2267	1
	RH	JLM2268	1

VIN 179736 on

RHD	LH	DAC7675	1
	RH	DAC7674	1
LHD	LH (except Germany)	DAC7681	1
	RH (except Germany)	DAC7680	1
LHD	LH (Germany)	DAC7673	1
	RH (Germany)	DAC7672	1

1a. European style single headlamp finisher without headlamp wash wipe to VIN 179736

LH	BAC5417	1
RH	BAC5416	1

with headlamp wash wipe to VIN 179736

LH	BAC4487	1
RH	BAC4486	1

VIN 179736 on

LH	DAC10457	1
RH	DAC10456	1

1a. Headlamp mounting rim

All models	LH	SBS7275	1
	RH	SBS7274	1

2. Headlamp bulb	DBC11404	2
3. Sidelamp bulb		
to VIN 179736	DBC11380	2
VIN 179736 on	DBC11381	2

4. Federal style quad headlamp kit

RHD to VIN 179736	SBS9167	1
LHD to VIN 179736	SBS9204	1
RHD VIN 179737 on	SBS9167FL	1
LHD VIN 179737 on	SBS9204FL	1

5. Indicator lamp

Pre H.E. European	C45145	2
Pre H.E. USA	DAC1039	2
H.E. to to VIN 179736	DAC2646	2

Side indicator lamp

Non USA/Canada

VIN 179736 to 188104	DAC11112	2
LH VIN188105 on	DAC10938	1
RH VIN188105 on	DAC10937	1

USA/Canada

VIN 179736 to 188104	DAC11112	2
LH VIN188105 on	DAC10941	1
RH VIN188105 on	DAC10940	1

5a. Indicator lamp lens

All pre H.E. models	37H8759J	2
6. Indicator lamp bulb	DBC11382	2
7. Side repeater lamp		
to VIN 179736	DAC4820	2
VIN 179737 to 190527	DBC12303	2
VIN 190528 on	LNA4812AA	2

7a. Side repeater lamp lens

to VIN 179736	27H2403J	2

8. Side repeater lamp bulb

to VIN 179736	JLM186	2
VIN 179737 on	DAC11380	2

9. Rear lamp
to VIN 179736

European	LH	DAC5585	1
European	RH	DAC5584	1
USA	LH	DAC5587	1
USA	RH	DAC5586	1

9a. Rear lamp lens
to VIN 179736

European	LH	JLM1552	1
European	RH	JLM1551	1
USA	LH	JLM1554	1
USA	RH	JLM1553	1

Non USA/Canada VIN 179737 on

LH	inner	DAC11093	1
LH	outer	LHC4901AA	1
RH	inner	DAC11092	1
RH	outer	LHC4900AA	1

USA/Canada VIN 179737 on

LH	inner	DAC11091	1
LH	outer	LHC4901BA	1
RH	inner	DAC11090	1
RH	outer	LHC4900BA	1

Inner dummy lamp for cars with narrow number plates

LH	DAC7395	1
RH	DAC7394	1

10. Rear lamp bulbs

Indicator all models	DBC11382	2
Stop/tail to VIN 179736	JLM9587	2
Stop/tail VIN 179737 on	DBC11383	2

11. Rear foglamp		
to VIN 179736	DAC1855	2

11a. Foglamp lens		
to VIN 179736	AEU1590	2

12. Foglamp bulb	DBC11382	2
13. Pillar courtesy/boot lamp		
All models	DAC5426	A/R
14. Courtesy/boot lamp bulb	LNA5180AA*	A/R
15. Roof courtesy lamp		
Coupe/Cabriolet	C45512	3/1
Convertible	DAC2660	2
Convertible rear quarter lamp		
VIN 188105 to 194774	DAC11431	2
VIN 194775 on	LHD5300AA	2
16. Roof courtesy lamp bulb		
6 watt	LNA5180AA	A/R
10 watt	JLM9591	A/R
17. Boot lamp to VIN 105047	C18778	1
18. Boot bulb lamp to VIN 105047	JLM9601	1
19. Number plate and reverse lamp housing		
to VIN 179736	DAC2090	1
19a. Reverse lamp lens LH		
to VIN 179736	AAU2045	1
19b. Reverse lamp lens RH		
to VIN 179736	AAU2044	1
19c. Number plate lamp		
to VIN 179736	AAU2043	2
Non Japan VIN 179737 on	DAC11454	2
Japan VIN 179737 on	DAC11455	2
20. Reverse lamp bulb		
to VIN 179736	JLM9592	2
21. Number plate lamp bulb		
to VIN 179736	LNA5180AA	2
VIN 179737 on	LNA5180AA	2
22. Door warning lamp		
LH to VIN 188104	DAC10077	1
RH to VIN 188104	DAC10076	1
LH VIN 188105 on	DAC10079	1
RH VIN 188105 on	DAC10078	
23. Door warning lamp bulb	DBC11381	2

24. High mounted stoplamp
Please ring with your VIN/trim colour code as there are several options

25. Front foglamp		
VIN 139052 to 179736	DAC4241	2
VIN 179737 to 188104	DAC7320	2
VIN 188105 on	DAC10769	2
25a. Foglamp lens & reflector		
All models	JLM1378	2
26. Foglamp bulb	JLM9588	2
27. Foglamp cover (with growler logo)	JLM1410	2

Speedometer (Smiths type only, please call if you have Veglia or your car is for the North American or Japanese market.)

3.6 electronic

to 1987	DAC3408 KPH	DAC3407 KPH
1987 to VIN144699	DAC4693 KPH	DAC4694 MPH
VIN 144700 on	DAC4696 KPH	DAC4697 MPH
5.3 Pre H.E.	C42230 KPH	C42229 MPH
5.3 H.E analogue	DAC2467 KPH	DAC1749 MPH
5.3 H.E. electronic to VIN 144262	DAC3408 KPH	DAC3407 MPH
5.3 H.E.electronic VIN 144263 on KPH(to 148781 MPH)	DAC4693 KPH	DAC4694 MPH
5.3 H.E. electronic VIN148782 on		DAC4695 MPH
5.3 H.E. electronic sports pack	DAC4696 KPH	DAC4697 MPH
4.0/6.0 VIN179736 on	DAC6464 KPH	DAC6465 MPH

Speedometer cable (analogue speedometers only)

Pre H.E. early to 2W2832/2W53506	C44915 RHD	C44911 LHD
Pre H.E. late 2W2833/2W53507 on & H.E. early	DAC1036 RHD	DAC1037 LHD

Speedometer cable angle drive (where fitted)

Pre H.E. early to 2W2832/2W53506	C24589
Pre H.E. late 2W2833/2W53507 on & H.E. early	C46183

Speedometer transducer (electronic speedos only)

to VIN 179376	DAC4569
VIN 179737 to 188104	DBC2632
VIN 188105 on	DBC11116

Rev counter

Pre H.E.	C42242
H.E to 1989	DAC1750
H.E. 1989 on	DAC5531
5.3 VIN 179736 on	DAC6469
4.0 VIN 179736 on	DAC6468
6.0 VIN 179736 on	DAC7368

Ammeter

to VIN 179736	C42239
VIN 179737 on	DAC6472

Fuel gauge

to VIN 179736	C42238
VIN 179737 on	DAC6470

Oil pressure gauge

to VIN 179736	C46145 LBS
VIN 179737 on	DAC10753

Water temperature gauge

to VIN 179736	C42240
VIN 179737 on	DAC11059

Time clock (analogue) LHD4315AA

Switches to VIN 179736

Steering column lock ignition switch only

Pre H.E.	DAC1422
H.E.	DAC2852
VIN 179736 to 185819	DAC6596
VIN 185820 on	DAC7857

Lighting

Pre H.E/H.E./3.6 to 1987	DAC2144
H.E/3.6 1987 on	DAC6913

Indicator

Pre H.E. to vin 101854	C46303 RHD	C46304 LHD
Pre H.E. 101855 on	C46304 non cruise	DAC1354 cruise
H.E to 1987	AEU1732 non cruise	AEU1733 cruise
H.E. 1987 on	AEU2526 non cruise	AEU2525 cruise
All 3.6	AEU2526 non cruise	AEU2525 cruise

Windscreen wiper

Pre H.E. to vin 101854	C42208 RHD	C42209 LHD
Pre H.E. 101855 on		C42209
H.E to 1987		AEU1734
3.6 to 1987		AEU2527
All models1987 on	AEU2527 Lucas motor	JLM1670 Electrolux motor

Interior light

Pre H.E	C45117
H.E./3.6	DAC2129

Map light

Pre H.E	C45116
H.E./3.6	DAC2128

Panel light rheostat RTC2534

Hazard warning

Pre H.E.	C45115
H.E./3.6	DAC2106

Electric window

Pre H.E.		DAC1301
3.6/H.E. to 1987		DAC2747
3.6/H.E 1987 on with picture on switch	DAC7526 RH	DAC7527 LH

Rear heated window

Pre H.E.	C40125
3.6/H.E.	DAC1355

Cruise control

Pre H.E	DAC2748

XJS H.E./3.6 to 1987		DAC2748
XJS H.E./3.6 1987 on		DAC7528
Sunroof		
3.6/H.E. to 1987		DAC2747
3.6/H.E. 1987 on		JLM1546
Hood/rear window (convertible only)		
3.6/H.E. 1987 on		DAC7529
Heated seats		
3.6/H.E. 1987 on		
DAC5076 RH		DAC5077LH
Seat lumbar adjustment		
3.6/H.E. 1987 on		
DAC4436 RH		DAC4435 LH

Switches VIN 179737 on

Column switches

Indicator with speed control		
Vin 179736 to 185819		JLM20055
VIN 185820 to 191607		DAC10518
VIN 191608 on		LHC6455AA
Indicator without speed control		
Vin 179736 to 185819		DAC6318
VIN 185820 to 191607		DAC10525
VIN 191608 on		LHC6455BA
Windscreen wiper		
Vin 179736 to 185819		DAC6316
VIN 185820 to 191607		DAC10517
VIN 191608 on		LHC6460AA
Headlamp levelling		DAC7244
Hornpush	LH	DAC5822
	RH	DAC5821

Fascia switches

Heated rear screen/hazard warning		
to VIN 185819		DAC10104
VIN 185820 to 188104		DAC10201
VIN 188105 on		DAC11170
Maplight		
to VIN 185819		DAC10105
VIN 185820 on		DAC10200
Foglamp switch		
Rear only		DAC10107
Dual with front and rear		
to VIN 185819		DAC10106
VIN 185820 on		DAC10203
Dual with rear screen		
to VIN 188104		DAC10204
VIN 188105 on		DAC11171

Console switches

Window lift	LH	DAC7527
	RH	DAC7526
Hood/rear quarter		DAC7529
Speed control		DAC7528

Miscellaneous

Mirror adjustment switch		
RHD		DAC7460
LHD		DAC7461
Trip computer		
to VIN 179736		DAC4295E
VIN 179737 on		
USA		DAC7362
Japan		DAC7363
All others		DAC7361
Cigar lighter		
5.3 Pre H.E.		C34863
all models to 1987		AEU2552
all models to VIN 188104		JLM1246
all models VIN188105 on		JLM21178

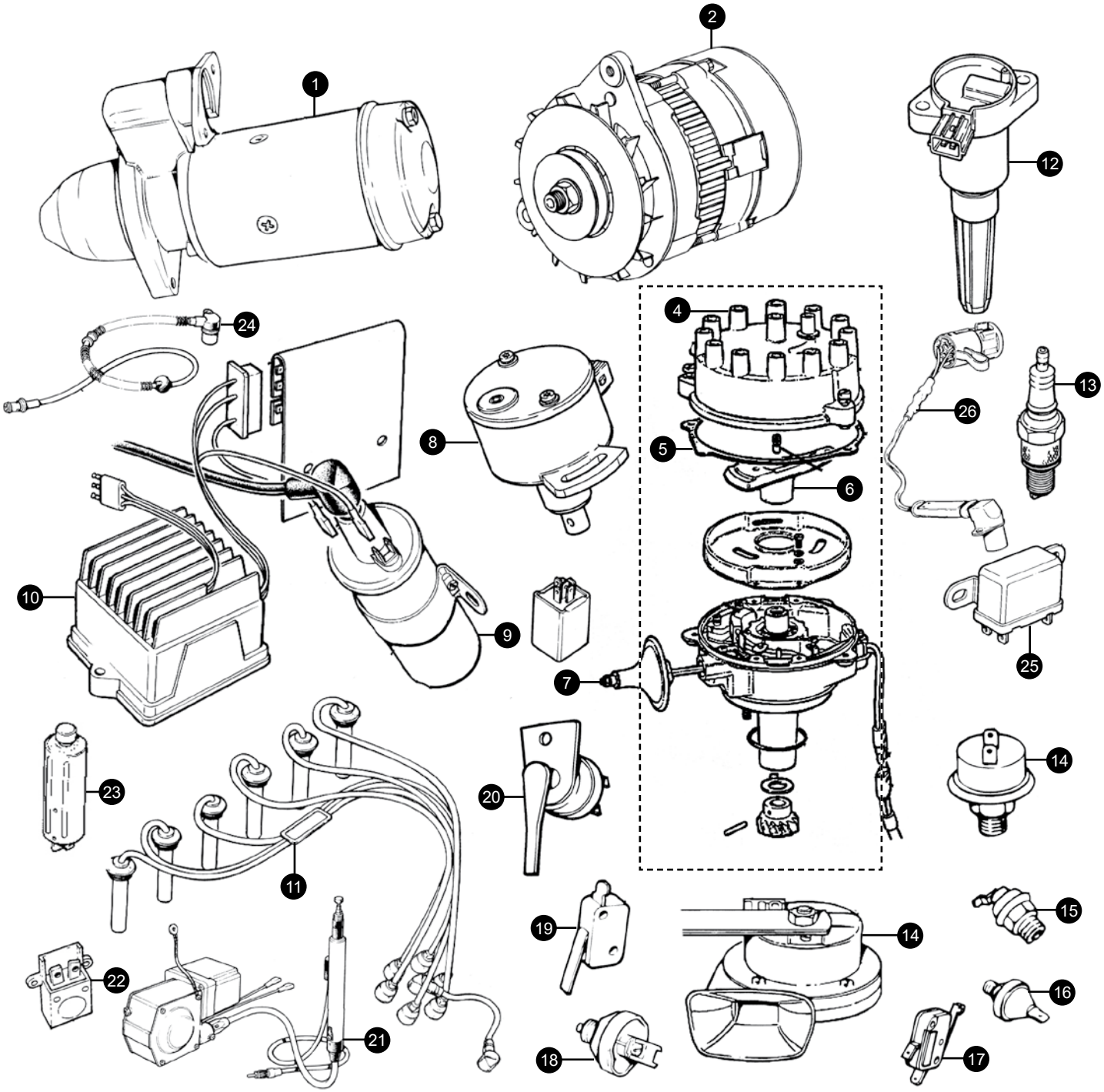
1
2
12
24
4
13
26
8
5
6
10
9
25
7
14
23
20
11
15
19
14
22
16
21
18
17

General Electrics

1. Starter motor		
3.6 to Jan 1987	DBC1939	1
3.6/4.0 Jan 1987 on	DBC2937	1
5.3/6.0	DBC6924	1
2. Alternator		
3.6 early 90 amp	DBC3067	1
3.6 late/4.0 to VIN 185819 115 amp	DAC5224N	1
4.0 VIN 185820 120 amp	DBC6819	1
5.3 pre H.E.	C46234	1
5.3 pre H.E. early	AEU1930E	1
5.3 H.E. earlyto eng 57572	LRA177	1
5.3 H.E. late eng 57573 on 115 amp	DAC5224N	1
5.3 from VIN 185820 & all 6.0 120 amp	DBC6820	1
3. Distributor		
3.6 1987 on & 4.0	DBC2690	1
5.3 H.E. to VIN 157115 (Lucas)	DAC4379E	1
5.3 H.E. VIN 157116 on & all 6.0 (Marelli)	DAC4758	1
4. Distributor cap		
3.6 to 1987	JLM9528	1
3.6 1987 on & 4.0	JLM150	1
5.3 pre H.E.	JS402	1
5.3 H.E. to VIN 157115 (Lucas)	DAC4168	1
5.3 H.E. VIN 157116 on & all 6.0 (Marelli)	JLM1909	1
5. Distributor cap gasket (where fitted)		
V12	JLM1910	1
6. Rotor arm		
3.6 to 1987	JLM9623	1
3.6 1987 on & 4.0	JLM381	1
All 5.3 to VIN 157115 (Lucas)	JLM9624	1
5.3 H.E. VIN 157116 on & all 6.0 (Marelli)	JLM1911	1
7. Vacuum unit		
5.3 V12 pre H.E.	AAU6704	1
5.3 V12 H.E to VIN 157115 (Lucas)	JLM519	1
3.6 to 1987	AEU2530	1
8. Engine position sensor		
4.0 VIN 179775 on	DBC10603	1
9. Coil		
5.3 pre H.E.	DLB170	1
5.3 H.E. to VIN 157115 main	DAC6093	1
aux	DAC2693	1
5.3 H.E. VIN 157116 on & all 6.0 (Marelli)	DAC4608	1
3.6 to 1987	DLB170	1
3.6 1987 on	C34736	1
4.0	DBC1140	1
10. Amplifier		
5.3 Pre H.E. with Opus system*	DAB113HEF	1
*(Kit to convert complete ignition system to later H.E. spec)		
5.3 V12 H.E to VIN 157115 (Lucas)	DAC2673	1
5.3 H.E. VIN 157116 on & all 6.0 (Marelli)	DAC11520	1
3.6 to 1987	DAC2673	1
3.6 1987 on	DAC10923	1
4.0 (pre on plug coil)	DAC10923	1
11. Plug lead set		
5.3 V12 to VIN 157115 (Lucas)	JLM726	1
5.3 H.E. VIN 157116 to 179736	JLM11016	1
5.3/6.0 VIN 179737 on	LHD1509AA	
3.6/4.0	DAC7811	1
12. On plug coil		
4.0 VIN 194775 on	LHE1510AB	6
Gasket for above	LHF1719AA	6
13. Spark plug		
5.3 Pre H.E.	EAC8915	12
All V12 H.E. (Non Emission A)	EBC4021	12
All V12 H.E. (Emission A)	NAB3850DA	12
3.6/4.0 (Non Emission A)	EBC11480	6
3.6/4.0 (Emission A)	EBC8143	6

N.B. Emission A is a system used in certain markets (primarily North America and Japan). All European/ Australasian cars are Non Emission A.

14. Oil pressure sender unit		
5.3 V12 pre H.E. early	RTC2574	1
5.3 V12 pre H.E. late/XJS H.E. to 179736	C46272	1
V12 VIN 179737 on	LMD5640AB	1
3.6	C46272	1
4.0	JLM20791	1
15. Oil pressure warning light switch	LHD5642AA	1
16. Temperature sender		
To VIN 179736	DAC2583	1
VIN 179737 on	DAC11079K	1
17. Kickdown inhibitor switch	C33509	1
18. Reverse light switch	DAC3844	1
19. Handbrake warning light switch	DAC3351	1
20. Brake light switch		
5.3 pre H.E.	JLM21585	1
5.3 H.E./XJS 3.6 to 1987	DAC1308	1
5.3 H.E./XJS 3.6 1987 to VIN 179736	DBC2960	1
VIN 179737 to 188104		
non cruise	DAC10863	1
cruise	DAC10864	1
VIN 188105 on		
non cruise	LHF6420AA	1
cruise	LHF6420CA	1
21. Radio aerial		
VIN 139052 -190527	LHB4120AA	1
(Mast only for above)	DBC2200	1
VIN190528 on	LHD4120AA	1
(Mast only for above)	LNA4134AA	1
22. Thermal cutout		
Electric windows	DAC11334	1
Air conditioning (where fitted)	DAC3374	1
23. Fuel pump cutout		
Tubular grey type	C41220R	1
Square black type	DBC2022	1

24. ABS wheel speed sensor		
LHF	**DAC11151**	**1**
RHF	**DAC11150**	**1**
LHR to VIN 188104		
Coupe	**DAC6899**	**1**
Convertible	**DAC10789**	**1**
RHR to VIN 188104		
Coupe	**DAC4840**	**1**
Convertible	**DAC10788**	**1**
LHR VIN 188105 on	**DAC11149**	**1**
RHR VIN 188105 on	**DAC11148**	**1**
25. Relay 22RA		
Various uses starter, headlamp etc	**C36611**	**1**
26. Crankshaft speed sensor 4.0		
to eng 101198	**DBC12296**	**1**
eng 101199 to 160451	**LHE1640AA**	**1**
eng 160452 on	**DBC11501**	**1**

Wash Wipe

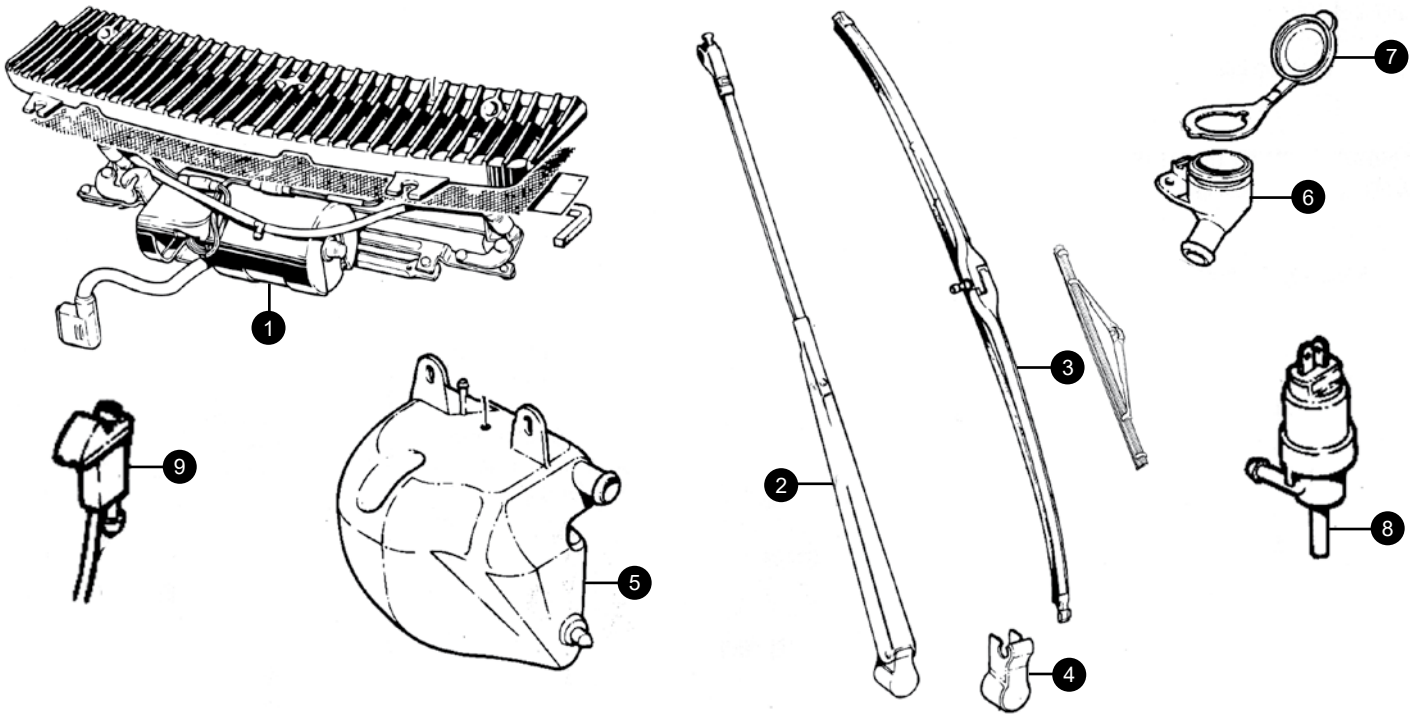

1. Wiper motor

Lucas type			
18W type	**RHD/LHD**	**75898**	**1**
27W	**RHD**	**76306**	**1**
27W	**LHD**	**76314**	**1**
XJS Electrolux type from VIN 152511 to VIN179736			
		JLM11216	**1**
VIN 179737 on			
	LHD	**GHF8951AB**	**1**
	RHD	**GHF8950AB**	**1**

2. Wiper arm

Pre H.E.	**RH**	**JLM745**	**1**
	LH	**JLM746**	**1**
XJS H.E. early			
RHD	**RH**	**DAC2659**	**1**
	LH	**DAC2658**	**1**
LHD	**RH**	**DAC2859**	**1**
	LH	**DAC2659**	**1**

XJS H.E. late/XJS 3.6 Lucas wiper motor

RHD	RH	DAC3438	1
	LH	DAC3436	1
LHD	RH	DAC3437	1
	LH	DAC3438	1

XJS H.E./3.6 with Electrolux motor

RHD	RH	DAC6148	1
	LH	DAC6150	1
LHD	RH	DAC6150	1
	LH	DAC6149	1

VIN 179736 to 188104

Drivers Side	RHD	DAC6148	1
	LHD	DAC6149	1
Passengers Side		DAC6150	1

VIN 188105 on

Drivers Side	RHD	DAC11036	1
	LHD	DAC11037	1
Passengers Side			
	RHD	DAC11038	1
	LHD	DAC11039	1

3. Wiper blade

XJS pre H.E./XJS H.E. early	DAC2657	2
XJS H.E. late/XJS 3.6	JHP1093	2
VIN 179736 on	GHD8960AA	2

4. Wiper arm boss cover	BAU1124	2

5. Washer bottle

Windscreen washer bottle

to VIN 105047	C43038	1
VIN105048 to 148781	JLM393	1

Headlamp power washer bottle

to VIN 139051	DAC2853	1
VIN139052 to 148781	DAC4368	1

Combined windscreen & headlamp power washer bottle

With headlamp wash

VIN 148782 to 179736	JLM20060	1
VIN 179737 to 188104	JLM10665	1
VIN 188105 onwards	JLM11377	1

None Headlamp wash

VIN 148782 to 179736	JLM2217	1
VIN 179736 to 188104	JLM10664	1
VIN 188105 onwards	JLM11376	1

6. Washer bottle filler neck

VIN 148782 on	DAC4734	1

7. Washer bottle filler neck cap

VIN 148782 on	DAC4888	1

8. Washer pumps

Screen washer pump

to VIN 105047	C36850	1
VIN105048 to 110190	DAC2403	1
VIN110191 to 179736*	JLM20122	1/2
VIN 179737 to 188104	JLM20122	1
VIN 188104 onwards	DBC6796	1

* 2 required if vehicle is fitted with headlamp power wash

Headlamp power washer pump

VIN179736 to 185819	DAC7825	1
VIN 185819 to 188104	DAC11044	1
VIN 188105 on	DAC10466	1

9. Washer jet

Screen washer jet

to VIN 105047	DAC2038	2
VIN 105048 to 148781	DAC2666	2
VIN 148782 to 157117	DAC6398	2
VIN 157118 to 179736	DAC6398	2
VIN 179737 to 186980	DAC7708	2
VIN 186981 to 188104	DAC10781	2
VIN 188105 on	LHE7096AA	2

Headlamp power washer jet

VIN 179736 to 188104		
LH	DAC7929	1
RH	DAC7930	1
VIN 188105 on		
LH	LHD7053AA	1
RH	LHD7052AA	1

Headlamp power washer jet cover

VIN 179736 to 188104		
LH	DAC7927	1
RH	DAC7928	1
VIN 188105 on		
LH	LHC7055AA	1
RH	LHC7054AA	1

10. Headlamp wiper blade	DAC2488	2

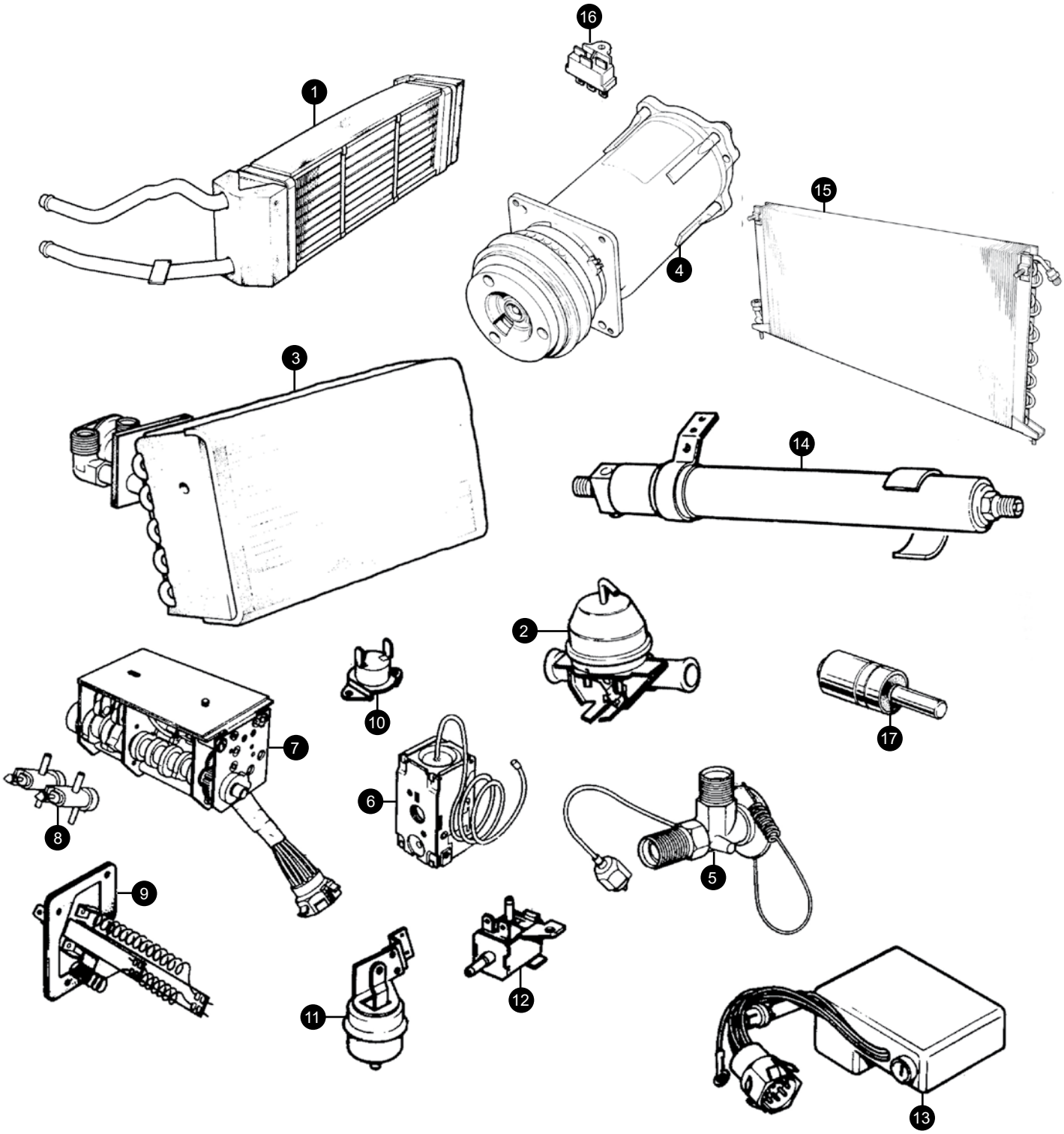
16
1
15
4
3
14
2
10
17
7
6
8
5
9
12
11
13

Heating & Air Conditioning

There are many parts used in any Jaguar heating or air conditioning system. Here are a selection of the most popular ones that we find are regularly purchased by our customers. If the part you require isn't listed for your car, please call.

1. Heater matrix

to VIN 139051	pipes attached	AEU1195	1
VIN 139052 on*	separate pipes	JLM11342	1
* Inlet pipe		JLM1515	1
* Outlet pipe		JLM1516	1
* Joining gasket for pipes		JLM759	1

2. Heater water valve

3.6/5.3/6.0*	C41051	1
4.0 to VIN 193093*	C41051	1
4.0 VIN 193094 on	CCC4915	1
* Mounting bracket	C42452	1

3. Evaporator

to VIN 139051	AEU1191	1
VIN 139052 to 190527	JLM1197	1
VIN190528 on	JLM20609	1

4. Compressor

5.3 to VIN 104080	EAC1986R	1
5.3 VIN 104081 on/ all 3.6	EAC9616	1
4.0 to VIN 190527	CCC4929	1
4.0 VIN 190528 on	MHE7300AA	1
6.0	MHE7300BA	1

5. Expansion valve

to RHD 2W4032/ LHD 2W54659	RTC693	1
RHD 2W4033/ LHD 2W54660 to VIN139051	CAC2423	1
3.6 to VIN 139051	CAC5934	1
VIN 139052 to 190528	JLM1228	1

6. Air temperature thermostat

to VIN 139051	AEU1675	1

7. Servo assembly

to VIN 139051	JLM523E	1

8. Servo vacuum valve

to VIN 139051	RTC1076	1

9. Resistor

to VIN 139051	RTC677	1

10. Coolant temperature thermostat

to VIN 139051	RTC672	1

11. Actuator valve

to VIN 139051	RTC684	1

12. Vacuum valve

to VIN 139051	RTC670	1

13. Amplifier

to VIN 139051	C45402	1

14. Drier bottle (visual identification below)

to VIN 190527	CAC1881	1
VIN 190528 on	MHD7410AB	1

15. Condenser

3.6		CBC8541	1
4.0	to 184573	CBC8541	1
	184573 to 190527	CCC6496	1
	from 190528	MHD7390BA	1
5.3	to 184573	CBC8540	1
	from 184574	CCC5326	1
6.0	to 190527	CCC5326	1
	from 190528	MHD7390AA	1
	upper	KGAIZ7003	1
	Lower	C2C16681	1

16. Thermal cut-out	DAC3374	1
17. Idler pulley adjustment bearing	EAC3042	1

+44 1746 765432
sales.uk@sngbarratt.com
+33 385 201420
france@sngbarratt.com
018 01 833 833 (DE only)
sales.de@sngbarratt.com
+31 13 521 1552
sales.nl@sngbarratt.com
+1 800 452 4787
sales.usa@sngbarratt.com

Order your parts online...

- ✓ Modern and dynamic look
- ✓ Easier and faster Parts Finder for easier ordering
- ✓ Updated illustrations for E-Type and XK
- ✓ Multi-lingual including French, Dutch and German
- ✓ Phone and tablet compatible

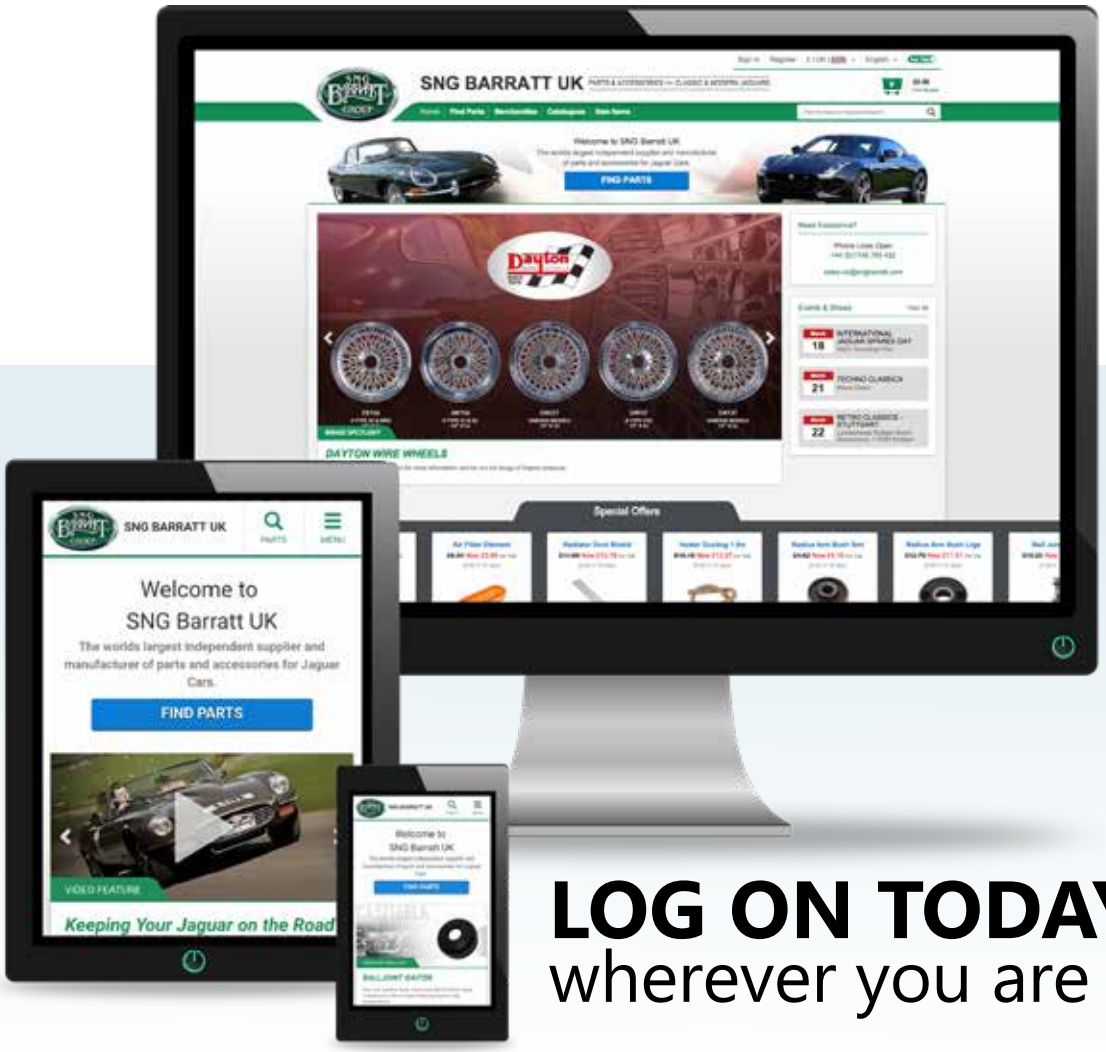

LOG ON TODAY
wherever you are

www.sngbarratt.com

ALL MODELS COVERED • UPGRADES • PARTS MADE IN HOUSE
OVER 50,000 PARTS AVAILABLE • EASY ONLINE ORDERING

S·N·G
BARRATT
GROUP

www.sngbarratt.com