S·N·G
BARRATT
GROUP

X300 XJ40

THE PARTS COLLECTION

FIND US...

With over 30 years experience in supplying Jaguar parts, SNG Barratt Group are the World's largest independent specialists, with a Head Office in the UK and branches in the USA, France and Holland. We stock and supply parts for Jaguar cars from 1949 right through to the present day.

SNG BARRATT LTD
BRIDGNORTH, UNITED KINGDOM

T: +44 (0)1746 765432 E: sales.uk@sngbarratt.com

SNG BARRATT USA
NEW HAMPSHIRE, USA

T: +1 800 452 4787 E: sales.usa@sngbarratt.com

SNG BARRATT FRANCE
CHARNEY-LES-MACON

T: +33 (0)3 85 20 14 20 E: france@sngbarratt.com

SNG BARRATT NL
OISTERWIJK

T: +31 (0)1352 11 552 E: sales.nl@sngbarratt.com

SNG BARRATT GERMANY
OISTERWIJK, NL

T: 018 01 833 833 (DE only) E: sales.de@sngbarratt.com

ALL INCLUDED IMAGES & DATA
© SNG BARRATT GROUP LTD. 2018

KEEPING JAGUARS PURRING

ALL OVER THE WORLD

EXPERIENCE, KNOWLEDGE & EXPERT ADVICE

MULTILINGUAL STAFF TO HELP CUSTOMERS WORLDWIDE

EXTENSIVE WAREHOUSES

1-2 DAY SHIPPING

24 HOUR ONLINE ORDERING & UP-TO-DATE STOCK AVAILABILITY

INTERACTIVE PARTS SEARCH & FREE CATALOGUES

WELCOME

SNG Barratt first started to sell and remanufacture Jaguar components in the 1970's. With constant re-investment the range quickly grew and more and more items were re-introduced.

Now many years later we make a multitude of parts for all Jaguars, classic and modern. This catalogue is designed purely with the X300/ XJ40 owner in mind and offers a comprehensive range of products.

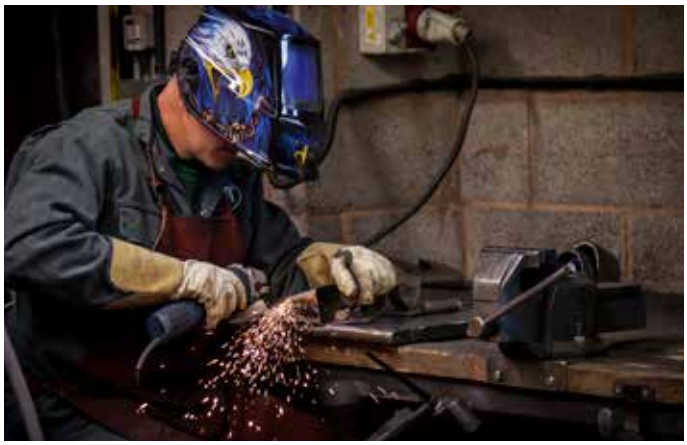

YOUR CUSTOMER NUMBER

Upon dealing with SNG Barratt for the first time you will be allocated a customer number. In most cases this will be your UK postcode or in the USA your telephone number. However if you are outside the UK/USA your sales advisor will use either your postal area code or a number devised using your surname. This customer number can either be found on your invoice or simply by asking the person serving you. The ability to provide your customer number when contacting our sales department will allow us to access your information far faster and serve you even more efficiently.

Customer number: .....

HOW TO USE THIS CATALOGUE

Use the illustration in each section to identify the component that you require. Note the indicated item number and find the corresponding number in the section listing. There you will see our part number for that item, the description and to it's right the quantity required per car. Very often this will be the original Jaguar part number, thus allowing you to refer to an original factory parts catalogue if more detail is required.

Each part number is listed in our price list. This listed price is per item and is plus VAT, (BTW or Mwst where applicable) except in the case of books and other VAT exempt items.

If you then quote this part number when contacting our sales department or enter it into our website, we will be able to confirm the cost and whether we have the part in stock.

If you cannot find or conclusively identify the item that you require then please call and we will aim to assist you.

Whilst this catalogue is a comprehensive publication it is not a definitive guide to everything that we do. Our staff have many years of experience with all aspects of the Jaguar marque and may just have the answer...

NOTE: The listing or illustrating of an item does not guarantee its availability.

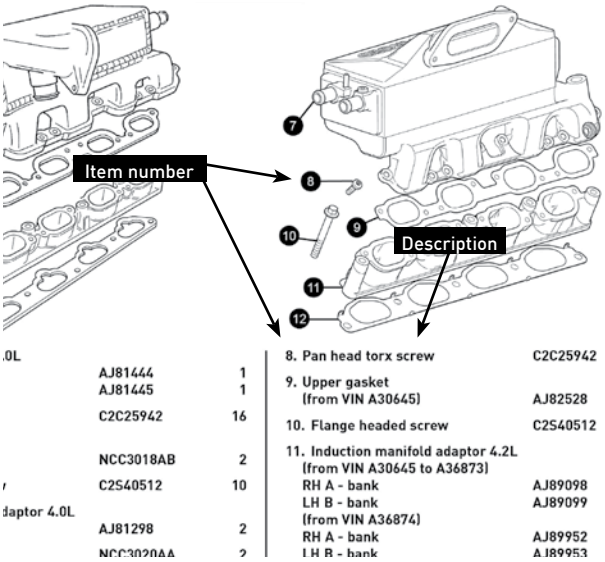

We manufacture hundreds of Jaguar parts and have access to thousands more, for classic and modern cars.

You can download your very own set of catalogues online:

www.sngbarratt.com

GUIDE TO CONTENTS

ENGINE

ENGINE BLOCK	3
WATER PUMP	5
CYLINDER HEAD	6
TIMING GEAR	8
OIL COOLER	8
OILS, FLUIDS & CONSUMABLES	31

TRANSMISSION

DIFFERENTIAL AND PROPSHAFT	9

BRAKES, SUSPENSION & STEERING

FRONT SUSPENSION	10
REAR SUSPENSION	12
FRONT & REAR BRAKES	14
BRAKE HYDRAULICS	16
STEERING	17

COOLING, EXHAUST & FUEL SYSTEMS

COOLING	18
EXHAUST	19
FUEL	20

BODY & BODY FITTINGS

BODY PANELS	21
XJ40 BUMPERS	23
X300 BUMPER	24
ACCESSORIES	24
BODY GLASS & RUBBERS	26

TRANSMISSION

DIFFERENTIAL AND PROPSHAFT	9

BRAKES, SUSPENSION & STEERING

XJ40 LAMPS	28
X300 LAMPS	29
GENERAL ELECTRICS	30
HEATER/AIRCON/WASH WIPE	32

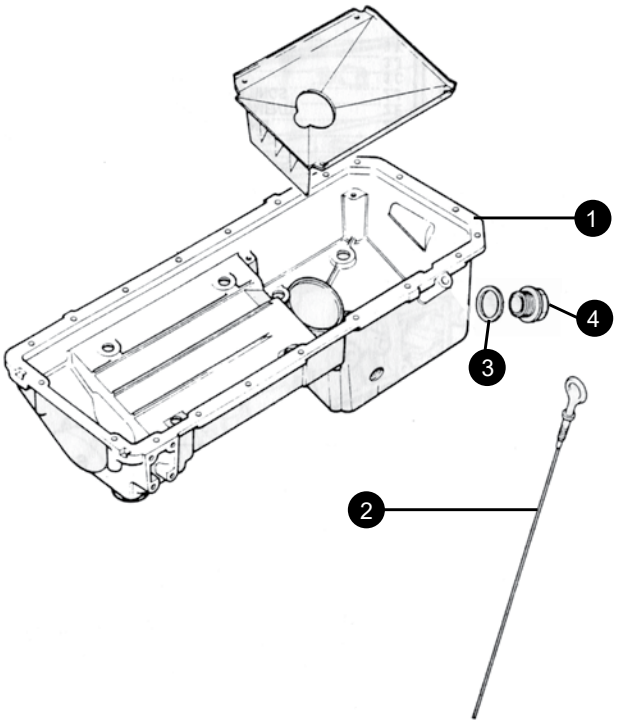

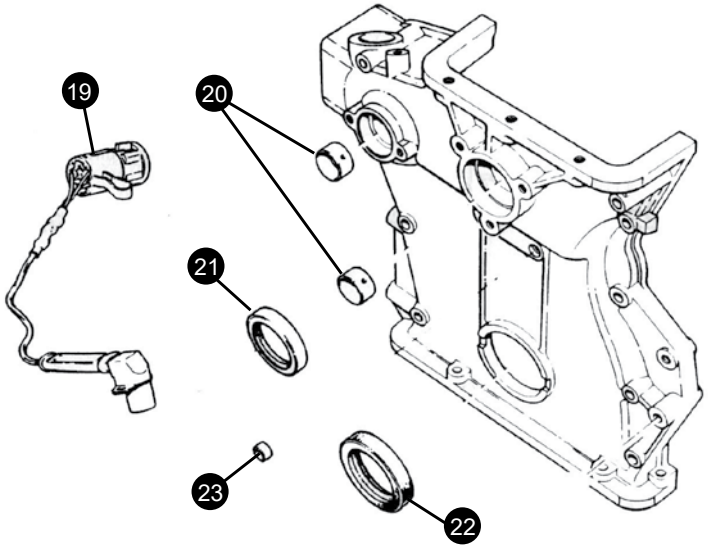

MORRIS
LUBRICANTS

Please turn to page 31 for a full range of quality oils, fluids & consumables.

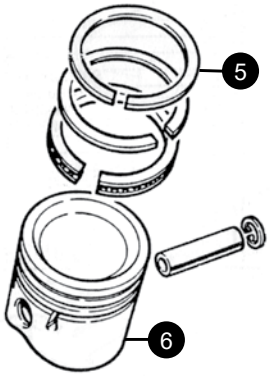

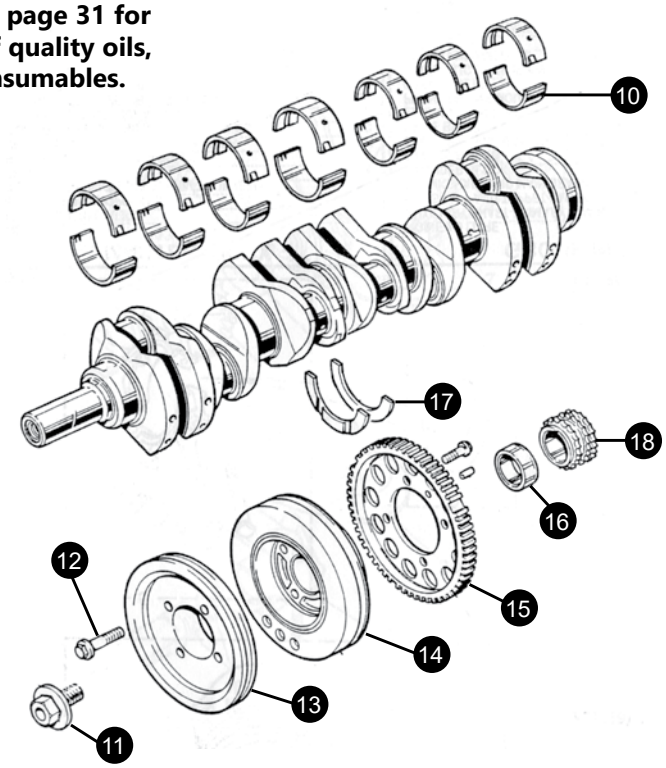

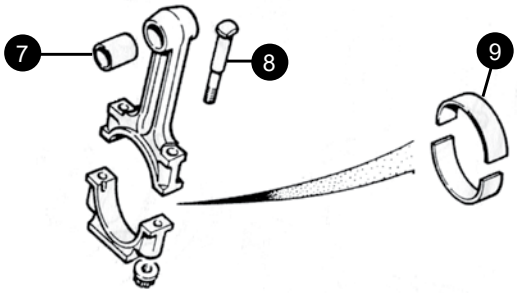

ENGINE BLOCK

1. Sump			
XJ40 2.9/3.6		EAC7436	1
XJ40 3.2/4.0 to 669478		EBC3892	1
XJ40 3.2/4.0 from 669479 & X300		NBC1701AA	1
2. Oil level dipstick			
All		EAC9276	1
3. Sump drain plug		EAC3972	1
4. Washer			
XJ40 3.2/4.0		EBC9044	1
5. Piston ring set			
XJ40 2.9/3.6		JLM581S	6
XJ40 3.2		JLM2223S	6
XJ40 4.0		JLM1818S	6
X300 non 6 litre		JLM11656S	6
X300 6 litre		JLM11043	12
6. Engine piston			
XJ40 2.9	to 105993 H.C.	EAC8543S	6
	105994 on H.C.	EBC1321S	6
	Standard compression	EBC1323S	6
XJ40 3.2		EBC4691S	6
XJ40 4.0		EBC4133S	6
XJ40 3.6	High compression	EBC3554S	6
	Standard compression	EAC8746S	6
X300	3.2	NBA1600BBS	6
	4.0	EBC11408S	6
	4.0 S/C	NBD1600AAS	6
X300 6 litre		JLM11042	12
7. Small end bush			
XJ40 2.9/3.6		EAC2732	6
XJ40 3.2/4.0 & X300		EAC6567	6
X300 6 litre		C29308	12
8. Connecting rod bolt			
Except 6 litre		EAC1027	6
6 litre		C43809	12
9. Connecting rod bearings		RTC2854S	1 set
10. Crankshaft main bearings			
XJ40 3.2,3.6 & 4.0		JLM1817S	1 set
X300	Please call with colour code		
11. Crankshaft damper bolt		C32367/1	
12. Crankshaft pulley bolt		FB108091J	
13. Crankshaft pulley			
X300 3.2/4.0		EBC11083	1
X300 4.0 S/C		EBC9768	1
X300 6.0		NNA1411BA	1
14. Crankshaft damper			
XJ40	Please call with VIN/engine numbers		

15. Timing ring			
XJ40	Please call with VIN/engine numbers		
16. Spacer		EAC2464	1
17. Crankshaft thrust washer			
Standard		C34697	2
Oversized		C346971	2
18. Timing chain gear		EAC2456	
19. Crankshaft speed sensor			
XJ40	2.9	DBC21441	1
	3.6	DBC2139	1
	3.2/ 4.0 to 629285	DBC2139	1
	3.2/ 4.0 from 629286	DBC11501	1
X300	3.2/4.0	LHE1640AA	1
	6.0	LNA1644AA	1
20. Bush		EAC2522	1
21. Intermediate shaft oil seal			
XJ40		EAC7263	1
X300 3.2/4.0		EAC5721	1
22. Seal		EAC7954	1
23. Dowel		C2373	1
BOTTOM END GASKET SETS			
XJ40 2.9	to 109293	JLM835	1
	from 109294 on	JLM11574	1
XJ40	3.2/3.6/4.0	JLM11574	1
X300	3.2/4.0	JLM11574	1
X300	6.0	JLM11517	1
24. Oil pump all models		NBB1760AA	1
O'ring for oil pump fitment		EAC5536	1

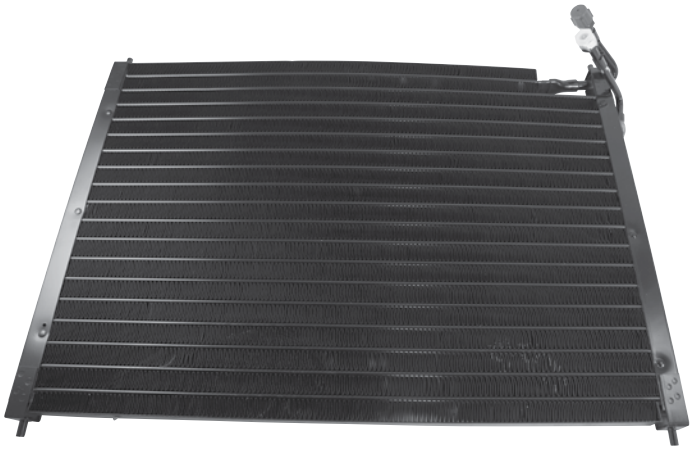

+44 1746 765432
sales.uk@sngbarratt.com

+33 385 201420
france@sngbarratt.com

018 01 833 833 (DE only)
sales.de@sngbarratt.com

+31 13 521 1552
sales.nl@sngbarratt.com

+1 800 452 4787
sales.usa@sngbarratt.com

WATER PUMP

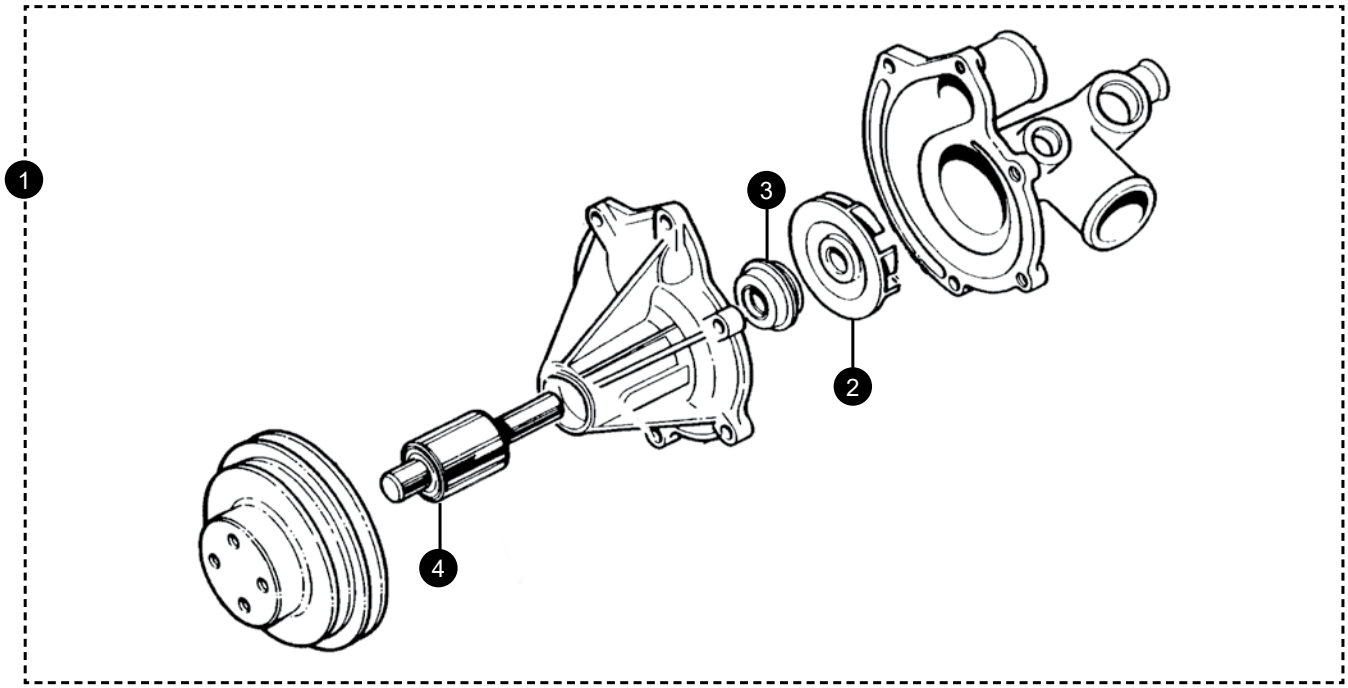

1. Water pump assembly			
XJ40	4 groove pulley	EBC8550	1
	5 groove pulley	NBB2200DA	1
X300		EBC10967	1
Gasket			
XJ40		EBC9220	1

2. Impeller		
XJ40	EAC7220	1
3. Seal		
XJ40	EAC6447	1
4. Bearing		
XJ40	EAC6305	1

SERVICE ITEMS

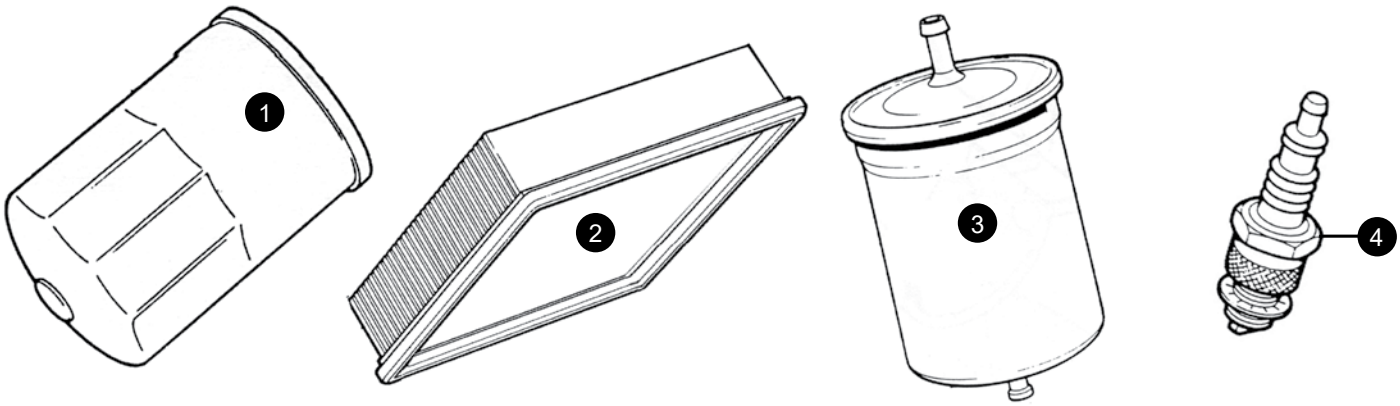

MODEL	OIL FILTER	AIR FILTER	FUEL FILTER	PLUGS
XJ40 2.9	EBC9658	EAC5672	CAC9630	EBC8523 x 6
XJ40 3.2/4.0	EBC9658	EAC5672	to 629285 CAC9630 from 629286 NMD6091AC	EBC11480 x 6
XJ40 3.6	EBC9658	EAC5672	CAC9630	EBC11480 x 6
X300	EBC9658	EAC5672	NMD6091AC	EBC11480 x 6

CYLINDER HEAD

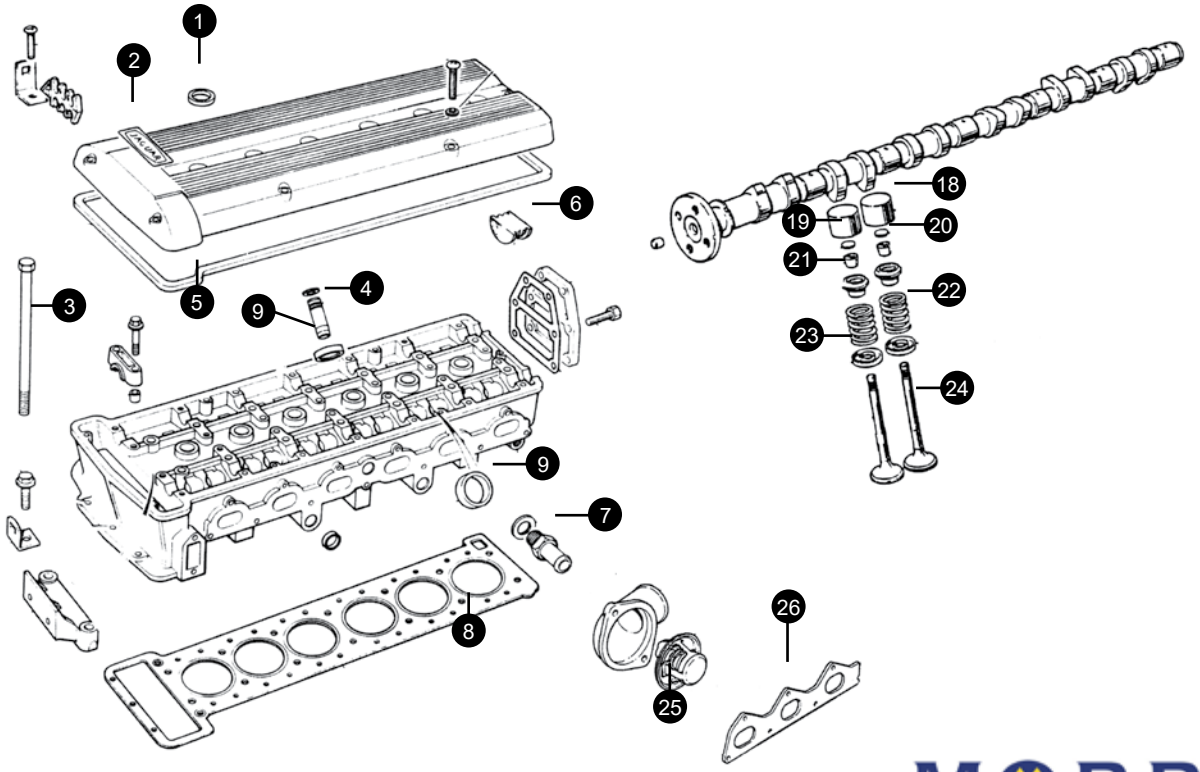

MORRIS LUBRICANTS

Please turn to page 31 for a full range of quality oils, fluids & consumables.

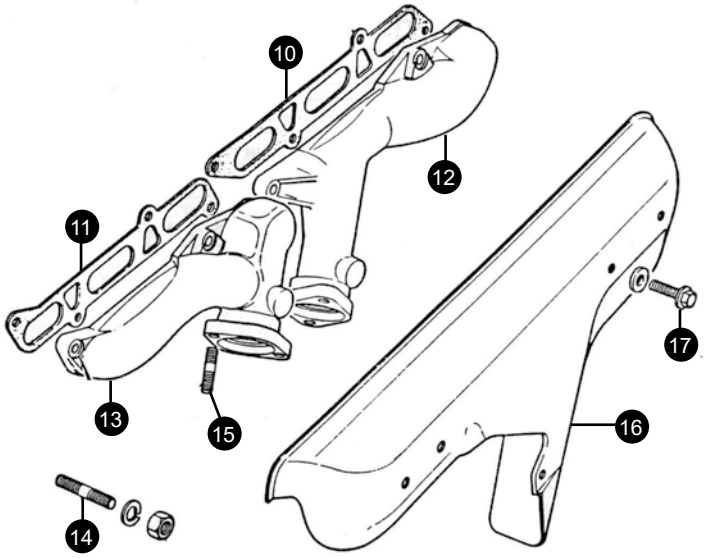

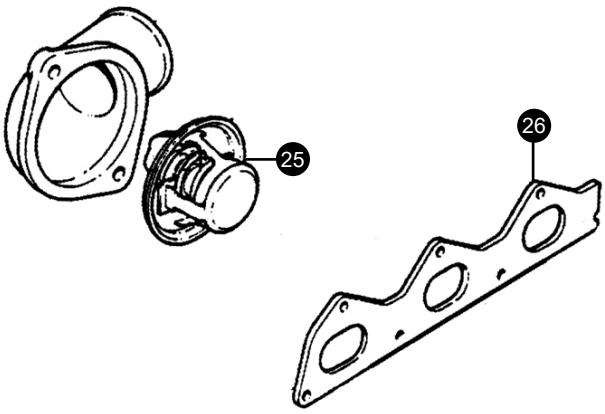

+44 1746 765432
sales.uk@sngbarratt.com

+33 385 201420
france@sngbarratt.com

018 01 833 833 (DE only)
sales.de@sngbarratt.com

+31 13 521 1552
sales.nl@sngbarratt.com

+1 800 452 4787
sales.usa@sngbarratt.com

1. Spark plug boss seal			EAC4049	6
2. Camshaft cover decal				
	Jaguar		EAC9679	1
	Daimler		EAC9680	
3. Head bolt 3.2,3.6,4.0			EBC1771	
4. Valve guide				
2.9	Inlet	1st o/s	C29390	6
		2nd o/s	C29391	6
	Exhaust	1st o/s	EAC3636	6
		2nd o/s	EAC3637	6
3.2,3.6,4.0	Inlet/Exhaust	1st o/s	C29390	6
		2nd o/s	C29391	6
5. Camshaft cover gasket				
	XJ40 2.9		C29428	1
	XJ40 3.2/3.6/4.0		EAC2912	1
	X300		NBC2525AA	1
Camshaft cover gasket kit with spark plug boss seals and cam cover end plugs			HL702	1
6. Camshaft cover bung			C30431	1
7. Heater feed adaptor			EAC7189	1
Washer			C2296/4	1
8. Head gasket*				
	2.9		EBC1550	1
	3.6 to engine no 109269		BT070	1
	3.6 engine no 109270 on		NBC2520AB	1
	3.2/4.0		NBC2520AB	1
Head Gasket Set (Contains head gasket, manifold gaskets, camcover gasket and ancillary gaskets and seals)				
XJ40 2.9			JLM2100	1
XJ40 3.2/3.6/4.0 to eng 116000/179541				
	Jaguar		JLM11008	1
	A.E. aftermarket		DT070	1
XJ40 3.2/3.6/4.0 eng 116001/179542 on			JLM11383	1
X300	3.2 to eng 107674		JLM12305	1
	4.0 to eng 111001		JLM12305	1
	3.2 eng 107675 on		JLM11649	1
	4.0 eng 111002 on		JLM11649	1
9. Valve insert				
2.9	Inlet		EAC3639	6
	Exhaust		EAC3641	6
3.6	Inlet		EAC6437	12
	Exhaust		EAC6435	12
3.2/4.0	Inlet		EAC6437	12
	Exhaust		EBC4198	12
10. Front exhaust manifold gasket				
	2.9		EBC10199	3
	3.2/3.6/4.0		EAC8994	1
	X300		EBC11330	1
11. Rear exhaust manifold gasket				
	2.9		EBC10199	3
	3.2/3.6/4.0		EAC8995	1
	X300		NBC2909AA	1
12. Front exhaust manifold				
XJ40	2.9		EAC7104	1
XJ40	3.2,3.6,4.0		EBC3599	1
13. Rear exhaust manifold				
XJ40	2.9		EAC7094	1
XJ40	3.2,3.6,4.0		EBC3597	1
14. Stud				
	2.9		TE108051J	8
	Nut		EAC5277	8
	3.6		EBC1292	8
	Nut		EAC5308	8
	3.2/4.0		EBC3316	8
	Nut to E187383		EAC5308	8
	Nut from E187384		FX110041	8
15. Downpipe stud			EAC3823	4
16. Manifold cover				
	2.9,3.2,3.6		EBC3539	1
	4.0		EBC10849	1
17. End Plug			C33244	2
18. Cam follower				
	2.9		C44010	12
	3.6		EAC8418	24
	3.2/4.0		EAC9218	24
19. Tappet shim				
	2.9	A to Z	C2243	A/R
	3.2,3.6,4.0		EBC113602	A/R
20. Cotter				
2.9	Inlet		C27482	12
	Exhaust		EAC7256	12
3.6	Inlet & Exhaust		C27482	48
3.2,4.0	Inlet		EBC2997	24
	Exhaust		EBC2998	24
21. Valve collar				
2.9	Inlet		C27480	6
	Exhaust		EAC7309	6
3.6	Inlet		EAC4709	12
	Exhaust		EAC7227	12
3.2/4.0	Inlet		EBC3806	12
	Exhaust		EBC3807	12
22. Valve spring				
2.9	engine set		VSP94566SP	SET
3.6	individually		EAC5875	24
3.2	individually		NBB2535AA	24
4.0	individually		NBB2535AA	24
23. Valve spring seat				
2.9,3.6			C27481	
3.2,4.0			EBC4902	24
24. Valve				
2.9	Inlet		EAC3630	6
	Exhaust		EAC7318	6
3.2,3.6,4.0	Inlet		EAC2909	12
	Exhaust		EAC7255	12
25. Thermostat			EBC3621	1
26. Inlet manifold gasket				
XJ40	2.9		EAC4750	1
XJ40	3.6		EAC4691	2
X300			EBC11081	2

TIMING GEAR & OIL COOLER

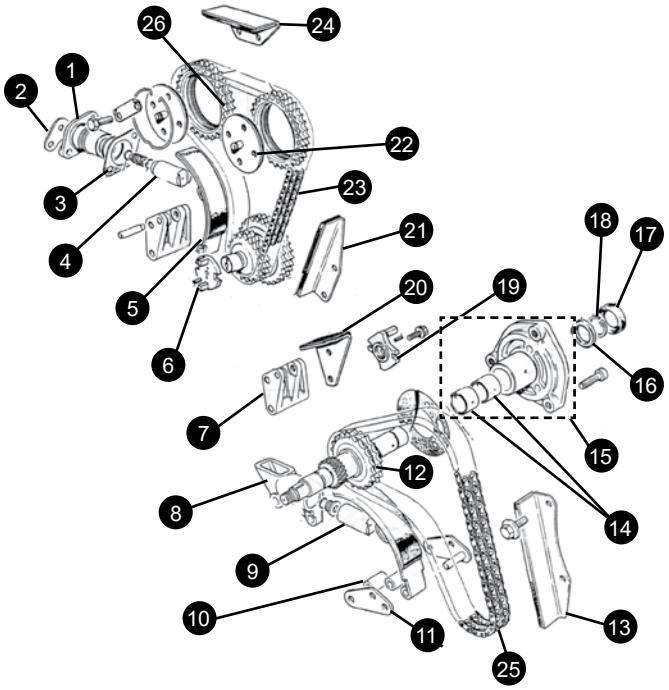

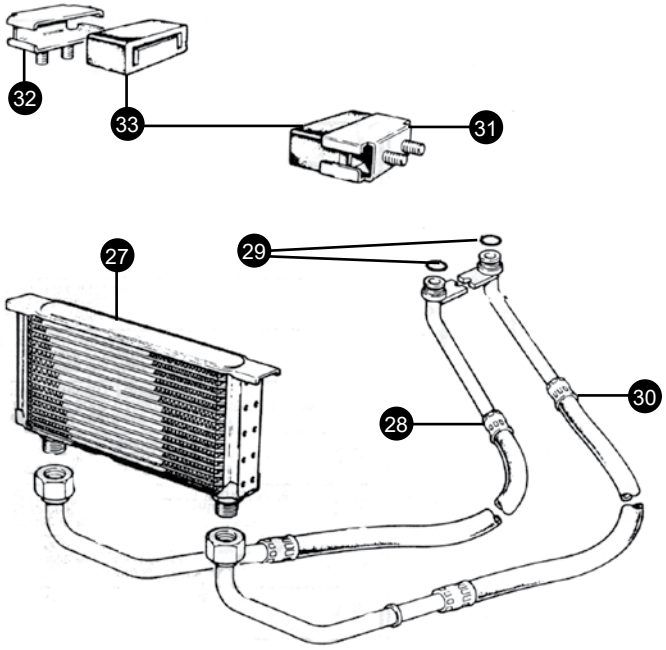

XJ40 MODELS FROM VIN 500001 TO 667828

NOTE: If you own X300 supercharged or V12 car, please call with full chassis number.

27. Oil cooler*	CAC8509	1
28. Oil return pipe*		
to 544387	CBC1309	1
from 544388	CBC8662	1
29. 'O'ring		
Engine end	CAC5118	2
Cooler end	KRC1160	2
30. Flexible hose*	CBC8661	1
31. Mounting bracket	CAC8442	1
32. Mounting bracket	CAC8443	1
33. Mounting rubber	CAC8444	2

* all fitted up to 667828

TIMING GEAR

1. Piston housing	EAC9508	1
2. Piston housing end plate	EAC4650	1
3. Gasket	EAC4557	1
4. Piston	EAC9607	1
5. Tensioner blade assembly	EAC4536	1
6. Drive coupling	EAC7639	1
7. Pivot bracket	EAC6783	1
8. Piston housing	EAC6878	1
9. Piston assembly	EAC5317	1
10. Distance piece	EAC4531	1
11. Support plate	EAC4532	1
12. Auxiliary shaft	EAC6741	1
13. Chain guide	EAC4533	1
14. Bush	EAC2522	1
15. Housing auxiliary shaft	EAC3921	1
16. Thrust washer	EAC3455	1
17. Oil seal	EAC6156	1
18. Circlip	CR120225J	1
19. Drive dog	EAC7080	1
20. Upper chain guide	EAC6766	1
21. Lower chain guide	EAC4534	1
22. Camshaft coupling	C33889	2
23. Upper timing chain	EAC4520	1
24. Upper chain guide	EAC4535	1
25. Lower timing chain	EAC4519	1
26. Camshaft sprocket		
XJ40/X300 early	C24686	2
X300 from eng 121837(3.2)/ 148107 (4.0)	NBB2549AA	2

+44 1746 765432
sales.uk@sngbarratt.com
+33 385 201420
france@sngbarratt.com
018 01 833 833 (DE only)
sales.de@sngbarratt.com
+31 13 521 1552
sales.nl@sngbarratt.com
+1 800 452 4787
sales.usa@sngbarratt.com

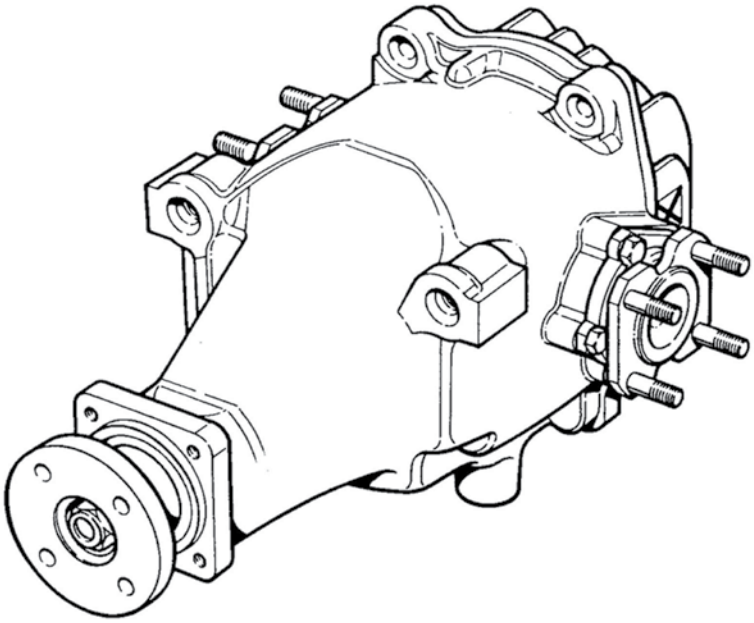

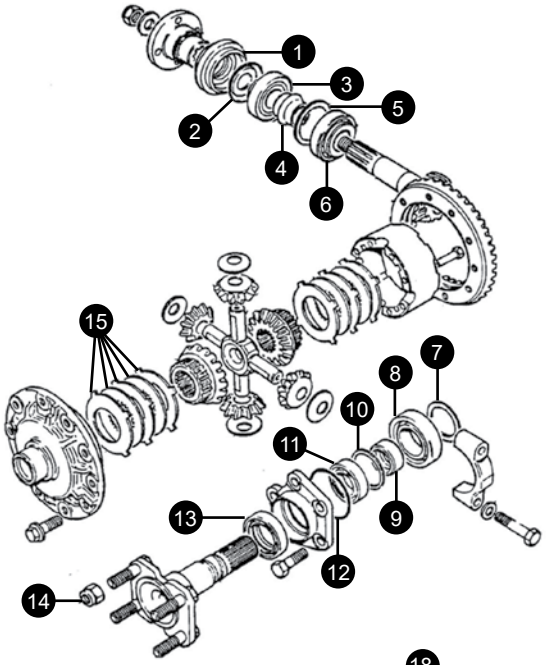

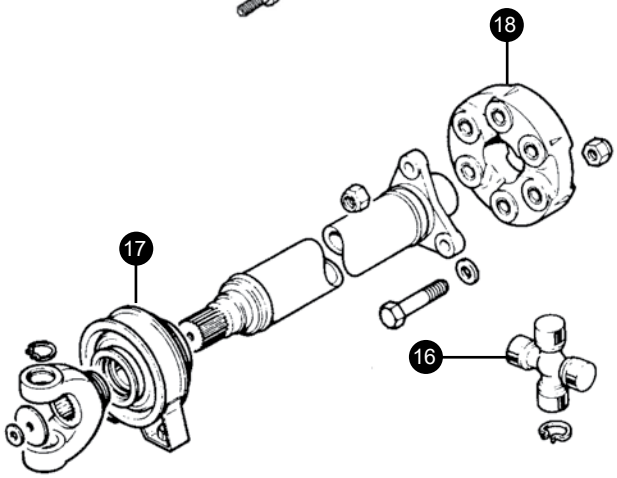

1. Pinion seal		CBC6923	1
2. Pinion spacer		JLM614	1
3. Outer pinion bearing		ATA7166	1
4. Collapsible spacer		12456	1
5. Outer pinion shim			
0.0003"		3860	A/R
0.0005"		3861	A/R
0.0010"		3862	A/R
6. Inner pinion bearing		12252	1
7. Shim	0.028-0.045"	JLM563 A to M	A/R
8. Bearing		3845	1
9. Retaining collar		JLM615*	1
10. Shim			
1.0mm		JLM1117	A/R
1.05mm		JLM1118	A/R
1.10mm		JLM1119	A/R
1.15mm		JLM1120	A/R
11. Bearing		JLM617*	2
12. 'O' ring		JLM621*	2
13. Output shaft seal			
XJ40		JLM618*	2
*Available in kit DBK1, 1 kit required per side			
X300		JLM12138	2
14. Nut		C24119/4	8
15. Friction plates			
Belleville		JLM725	2
Tagged		RTC1349A	4
Disc		RTC1416A	4
16. Universal joint	Standard	JLM823	2
	Uprated	JLM823U	2
17. Centre bearing		EBC9040	1
18. Rubber coupling		CAC7576	1

MORRIS LUBRICANTS

Please turn to page 31 for a full range of quality oils, fluids & consumables.

FRONT SUSPENSION

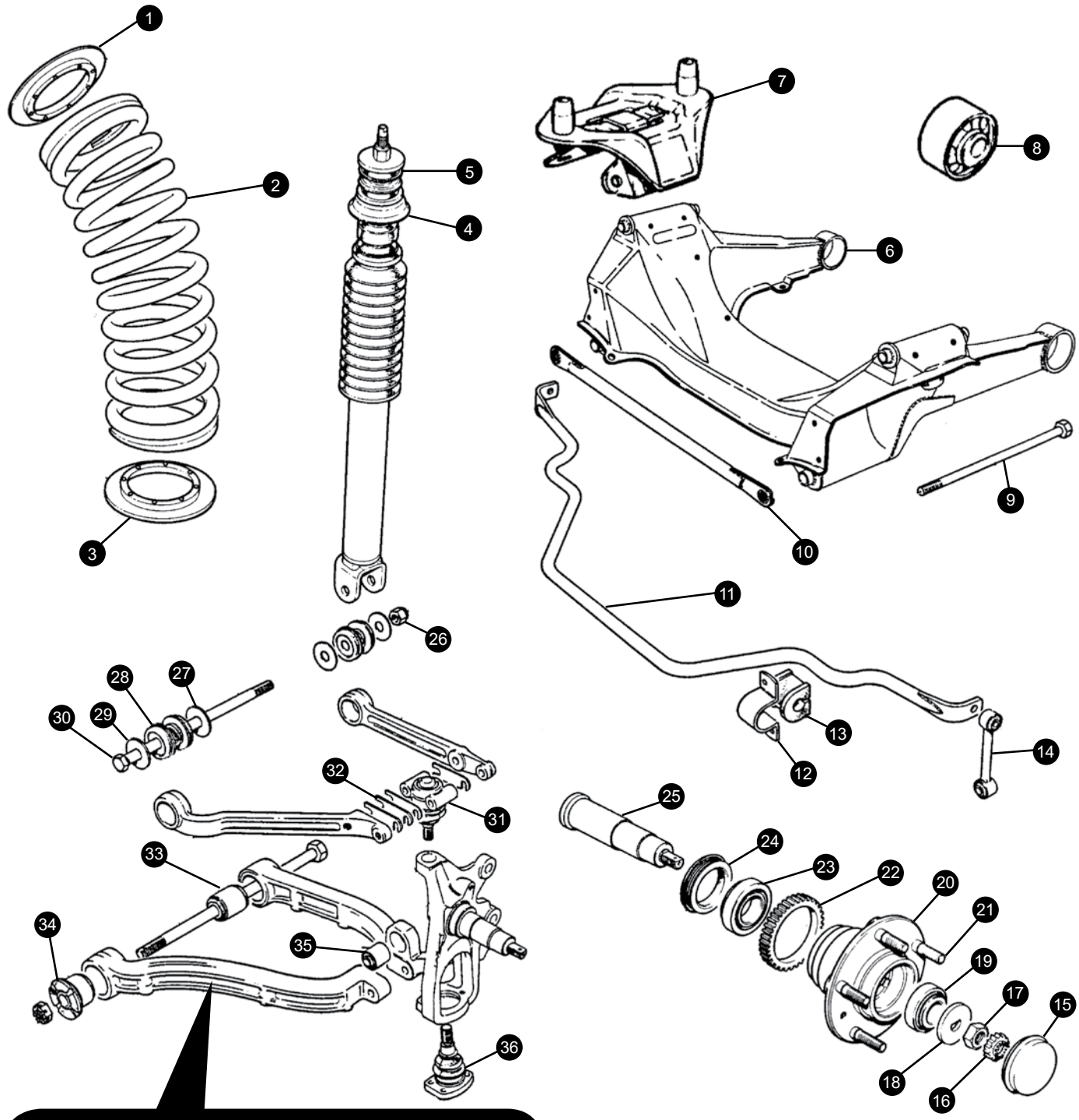

Standard front suspension rebuild kit
complete with ball joints

XJ40	to VIN 594575	SU3013	1
XJ40	VIN 594576 on	SU3016	1

Uprated polyurethane front suspension bush kit

All XJ40 models	SU3016PB	1

+44 1746 765432
sales.uk@sngbarratt.com
+33 385 201420
france@sngbarratt.com
018 01 833 833 (DE only)
sales.de@sngbarratt.com
+31 13 521 1552
sales.nl@sngbarratt.com
+1 800 452 4787
sales.usa@sngbarratt.com

XJ40 FRONT SUSPENSION

1. Packing and locator ring

1.5mm	CAC9822	A/R
4.5mm	CAC9822/1	A/R

2. Road spring
Please call with VIN number and market option information to allow us to identify the correct springs for your car.

3. Packing and locator ring

1.5mm	CAC9822	A/R
4.5mm	CAC9822/1	A/R

4. Shock absorber

XJ40	Standard	MMD2140AB	2
XJ40	Koni	26-1361	2
XJ40	Gaz	MMD2140ABGAZ	2
XJ40	Sportspack	MMD2140BB	2
XJ40	3.2S/4.0S	MMD2140CB	2
X300	Comfort	MMD2140AC	2
X300	Sports	MMD2140CC	2
X300	Supercharged	MNA2140AC	2

5. Upper shock absorber bush	MMD2144AA	2
6. Front suspension crossmember	MNA2247AC	2
7. Front crossmember "V" mtg	MNC2360AB	2
8. Front crossmember mounting bush	MNA2370AA	2
9. Lower fulcrum shaft	JLM11858	2
10. Lower fulcrum tie	MMD2260AA	2
11. Anti roll bar	CBC6470205	1
12. Anti roll bar support bracket		
RH	CBC5336	1
LH	CBC5337	1
13. Anti roll bar support bush		
XJ40 Standard	CAC4651/10	2
XJ40 3.2S/4.0S	CBC5580	2
XJ40 6.0	CCC2806	2
XJ40 6.0 Sportspack	CCC6349	2
X300 Comfort	CAC46517	2
X300 Sports	CCC2806	2
X300 Supercharged	MNA2102DA	2
14. Anti roll bar link assembly	CAC9827	2
15. Grease cap	CAC9865	2
16. Nut retainer	C45726	2
17. Nut	NT610041J	2
18. "D" shaped washer	CAC7651	2
19. Outer wheel bearing	CAC4603±	2
20. Wheel hub	CAC9834	2
21. Wheel stud	CAC4556	10
22. ABS braking sensor rotor	CBC4704	2
23. Inner wheel bearing	CAC4999±	2
24. Hub seal	CBC2858±	2
Front wheel bearing kit (inc. CAC4603)	JLM1707	2
25. Stub axle	CAC4650	2
26. Nut	NY112041J	2
27. Inner washer (early cars)	CAC3533	2

28. Upper wishbone bush

XJ40 early	to 594575	Standard	CAC9295	4
		uprated	CAC9295U	4
XJ40 late/X300	from 594576	Standard	CBC5523	4
		uprated	CBC5523U	4

29. Outer washer (early cars)	CAC3554	4
30. Upper fulcrum shaft	CBC1844	2
31. Upper ball joint	CAC9938	2
32. Shim Thick	CBC6416/1	2
Thin	CBC6416/2	2
33. Lower rear fulcrum bush		
Standard	CBC2301	2
Uprated	CBC2301U	2
34. Lower front fulcrum bush		
Standard	CBC2291	2
Uprated	CBC2291U	2
X300 from 722477	MMD1361AA	2
35. Shock absorber bush		
Standard	CAC75851	2
Uprated	CAC75851U	2
36. Lower ball joint	CAC9937	2
37. Nuts & bolts		
ARB bush keep plate bolt	SH108201J	4
ARB bush keep plate bolt - nut	NZ108041J	4
ARB link to ARB bolt	CAC7777	2
ARB link to ARB bolt - nut	NY607041J	2
ARB link to lower wishbone bolt	BH607301J	2
ARB link to lower wishbone bolt - nut	NY607041J	2
Lower fulcrum shaft nut	NL609041J	2
Bottom ball joint attachment bolt	CBC1805	8
Lower shock absorber bolt	CAC9626	2
Lower shock absorber bolt - nut	NY607041J	2
Upper ball joint nut	NY608041J	2
Lower ball joint nut	NZ609041J	2
Bolt through upper ball joint	CAC5863	4
Bolt through front subframe eye bush	BH612451J	2
Bolt through fnt subframe eye bush - nut	NZ612041J	2
Lower fulcrum tie shaft slotted nut	NL609041J	2
Spring pan to lower wishbone bolt	AGU2551	12
Vee mounting to body bolt	BP108201J	4
Vee mounting to beam bolt	SH108161J	4

Front wheel speed sensor

XJ40	LH from 594576	DBC5371	1
	RH from 594576	DBC5370	1
X300	LH	LNA2221AB	1
	RH	LNA2220AB	1

Standard front suspension bush kit complete with ball joints

XJ40	to 594575	SU3013	1
XJ40	from 594576	SU3016	1

Uprated polyurethane front suspension bush kit

All XJ40 models	SU3016PB	1

REAR SUSPENSION

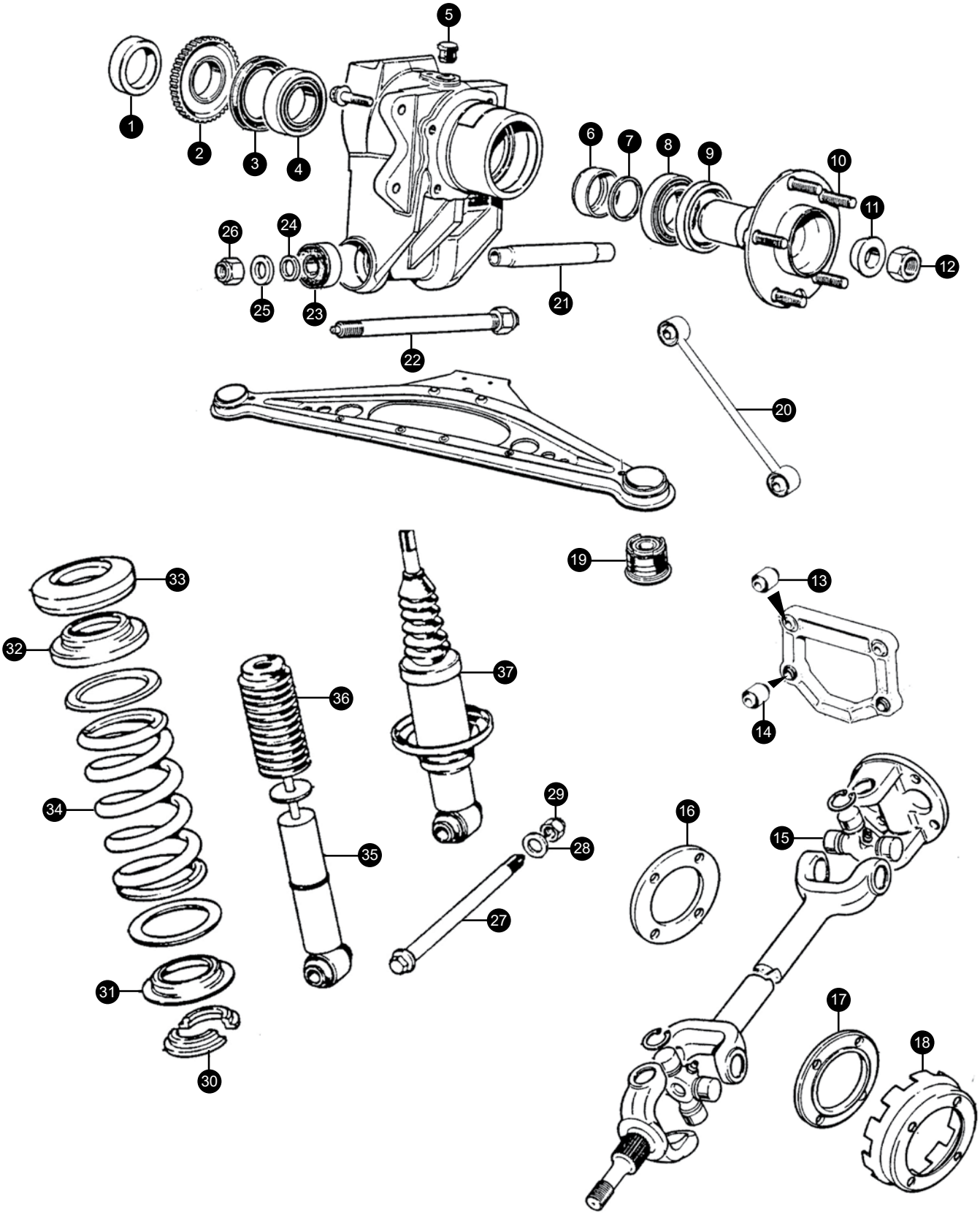

XJ40 REAR SUSPENSION

1. Seal track spacer (non ABS)	CAC7216	2
2. ABS sensor rotor	CBC4705	2
3. Inner hub seal	CBC1706±	2
4. Inner hub bearing	CAC6332±	2
5. Blanking plug	CAC7452	2
6. Bearing spacer	CAC5825	2
7. Adjustable spacer (various sizes)	CBC9505	A/R

Available in sizes 1 to 26 at 0.05 increments eg:
CBC95051 = 2.2mm
CBC9505/2 = 2.7mm

8. Outer hub bearing	CAC6333±	2
9. Outer hub seal	CAC8663±	2
±Included in rear wheel bearing kit	JLM1708	2
10. Wheel stud	CAC3878	10
11. Collar	CBC6652	2
12. Hub nut	CBC7355	2
13. Upper pendulum bush	CAC7760/1	2
14. Lower pendulum bush	CAC4713/1	2
15. Universal joint	JLM1388	4
16. Adjustable spacer RHS	CAC4784/35	A/R
17. Adustable spacer LHS	CBC4807	15 to 55
18. ABS speed sensor rotor LHS	CAC8713	1
19. "A" frame mounting bush		
XJ40	CBC1863	2
X300 Standard	CCC6875	2
X300 Supercharged	MJA2595AC	2
20. Differential strut	CBC2777	2
21. Sleeve	CAC5846	2
22. Outer pivot pin		
XJ40	CBC2589	2
X300	JZB100047	2
23. Bearing	CAC4610	4
24. Adjustable spacer (various sizes)	CBC1537	1to10 A/R
25. Washer	CBC2562	4
26. Nut	NY114041J	4
27. Damper bolt	CAC5833	2
28. Washer	JLM9571	2
29. Nut	CAC9496	2
30. Split collet	CAC4772	4
31. Spring support	CAC4771	2
32. Upper spring plate	CAC9439	2
33. Spring insulator	CAC9449/60	2
34. Rear spring kit		
XJ40	Contact sales	1
X300 comfort/sports		
to 751044	JLM11422	1
from 751045	JLM12257	1
4.0 Supercharged	JLM12342	1
35. Shock absorber		
XJ40 (non self level)		
Standard	CCC6923	2
Koni	30-1377	2
Gaz	CCC6923GAZ	2
3.2/4.0S, 687219 to 696458	MMC3540AA	2
Sportspack to 696458	CBC9745	2
X300 Rear shock absorber		
3.2/4.0 Comfort	MNA3540AD	2
3.2/4.0 Sport to VIN 747515	MNA3540BB	2
3.2/4.0 Sport from VIN 747516	MNA3540BD	2
Supercharged MNA3540CD	1	
36. Gaiter	CBC1886	2
37. Shock absorber (self level) ± to 696459	CBC8892	2

± We can provide a kit to convert cars fitted with self levelling to non self levelling suspension (to 696459) which also includes all the parts to seal the hydraulic system.

	JLM11698	1
38. Nuts & bolts		
Bolt through round A frame mounting	BH112181J	2
Pendulum stud	CAC8223	2
Pendulum stud nut	NY112041J	2
Pendulum stud nut	NY116041J	2
Wishbone fulcrum bolt	CBC4132	2
Wishbone fulcrum bolt - nut	NY112041J	2
Rear wheel speed sensor for ABS		
XJ40 LH from 594576	DBC6247	1
RH from 594576	DBC6246	1
X300 to VIN801671		
LH	LNA2223AB	1
RH	LNA2222AB	1
X300 from 801672	LJA2226AA	2

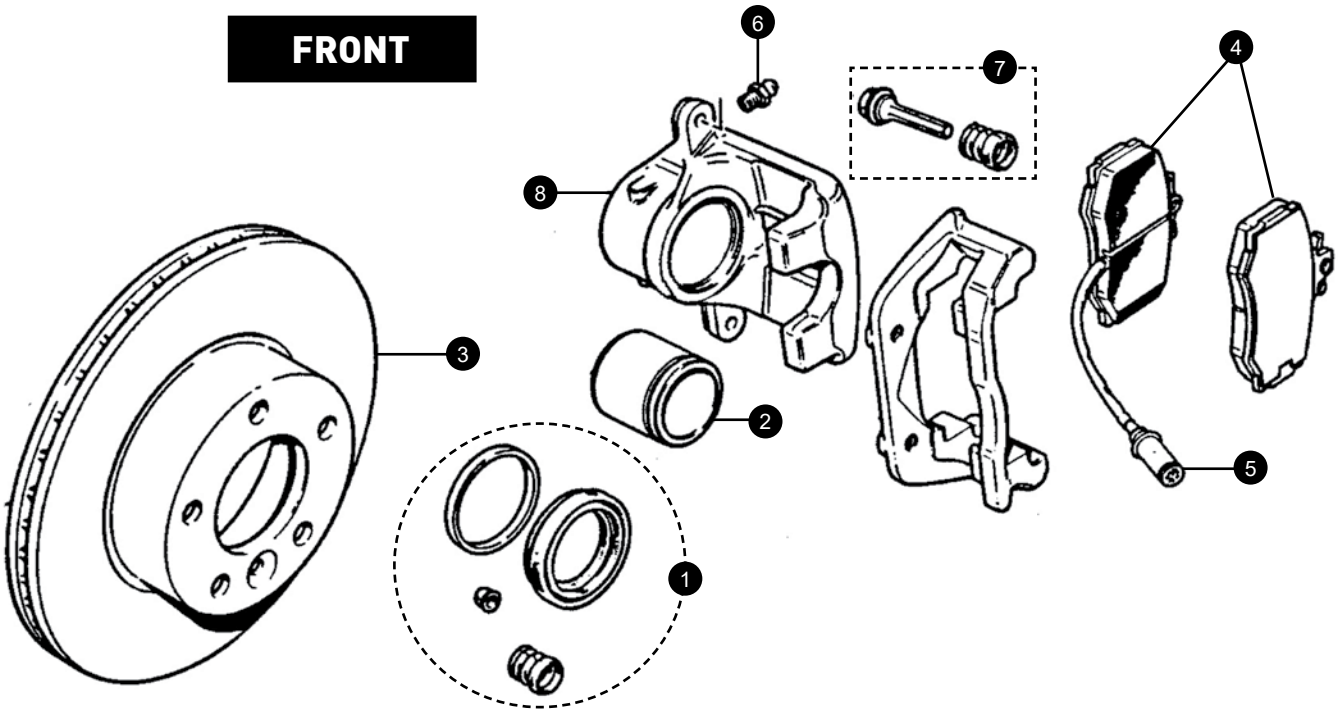

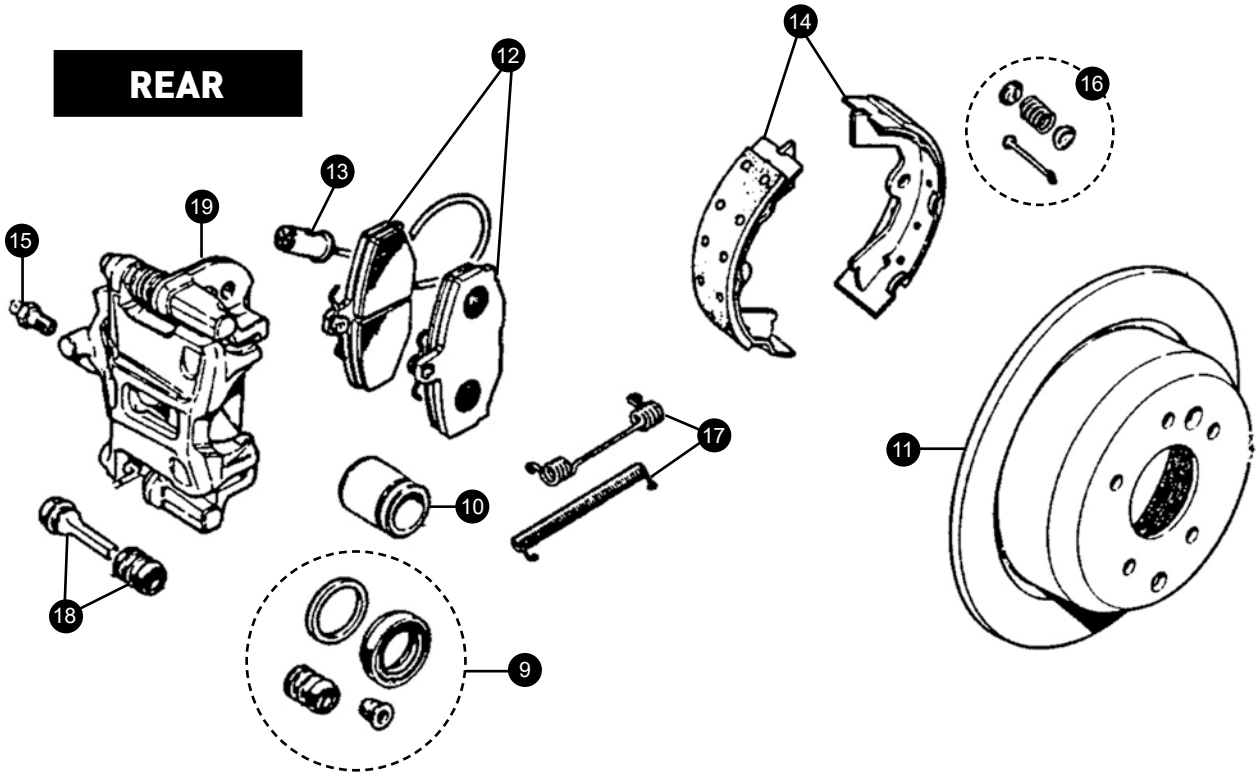

+44 1746 765432
sales.uk@sngbarratt.com
+33 385 201420
france@sngbarratt.com
018 01 833 833 (DE only)
sales.de@sngbarratt.com
+31 13 521 1552
sales.nl@sngbarratt.com
+1 800 452 4787
sales.usa@sngbarratt.com

XJ40 FRONT & REAR DISC BRAKES

FRONT

1. Caliper seal set

XJ40 to 594575	to 1990	JLM788	1
XJ40 from 594576	1990 on	JLM12123	1
XJ40 6.0		JLM11331	1
X300		JLM12123	1

2. Brake caliper piston

XJ40 to 594575	to 1990	JLM785	2
XJ40 from 594576	1990 on	JLM12123PIST	2
X300		JLM12123PIST	2

3. Front brake disc

XJ40 to VIN 594575	to 1990	JLM1305	2
XJ40 VIN 594576 on	1990 on	JLM1826	2
XJ40 6.0		JLM10928	2
X300		JLM1826	2

4. Brake pad set

XJ40 1986 to 1987	Standard	JLM577	1
	Kevlar	JLM577K	1
XJ40 to 594575 1987 to 1990			
	Standard	JLM1281	1
	Kevlar	JLM1281K	1
XJ40 from 594576	1990 on		
	Standard	JLM1829	1
	Kevlar	JLM1829K	1
XJ40 6.0		JLM11058	1
X300	Standard	JLM1829	1
	Kevlar	JLM1829K	1

5. Brake pad sensor

XJ40	3.2/4.0	DBC6595	2

6. Bleed nipple

to 594575	to 1990	JLM787	2
from 594576	1990 on	JLM2192	2

7. Slider repair kit

to 594575	to 1990	JLM789	2
from 594576	1990 on	JLM2194	2

8. Brake caliper assembly

XJ40 to 594575 to 1990			
	RH	JLM783	1
	LH	JLM782	1
XJ40 from 594576 1990 on			
	RH	JLM11716	1
	LH	JLM11717	1
X300	RH	JLM11716	1
	LH	JLM11717	1

REAR

9. Caliper seal set

to 594575	to 1990	JLM795	1
from 594576	1990 on	JLM2200	1

10. Brake piston

to 594575	to 1990	JLM794	2
from 594576	1990 on	Not available	

11. Rear brake disc

XJ40 to 594575	to 1990	JLM12429	2
XJ40 from 594576	1990 on	JLM1830	2
X300		JLM20342	2

12. Rear brake pad set

XJ40 1986 to 1987	Standard	JLM603	1
	Kevlar	JLM603K	1
XJ40 to 594575	to 1990		
	Standard	JLM1282	1
	Kevlar	JLM1282K	1
XJ40 from 594576	1990 on		
	Standard	JLM1833	1
	Kevlar	JLM1833K	1
X300	Standard	JLM21344	1
	Kevlar	JLM21344K	1

13. Brake pad sensor

XJ40	3.2/4.0	DBC6596	2

14. Handbrake shoe set

XJ40 to 594575	to 1990	JLM800	1
XJ40 from 594576	1990 on	JLM2209	1
X300		JLM2209	1

15. Bleed nipple

to 594575	to 1990	JLM787	2
from 594576	1990 on	JLM2192	2

16. Handbrake shoe retainer set

to 594575	to 1990	JLM799	1
from 594576	1990 on	Not fitted	1

17. Brake shoe pull off spring set

to 594575	to 1990	JLM801	1
from 594576	1990 on	JLM2203	1
		JLM2204	1

18. Slider repair kit

to 594575	to 1990	JLM796	2
from 594576	1990 on	JLM2194	2

19. Rear caliper

XJ40 to 594575			
	RH	JLM792	1
	LH	JLM791	1
XJ40 from 594576 to 667828			
	RH	JLM1831	1
	LH	JLM1832	1
XJ40 from 667829	RH	JLM12422	1
	LH	JLM12423	1
X300	RH	JLM12426	1
	LH	JLM12427	1

BRAKE HYDRAULICS

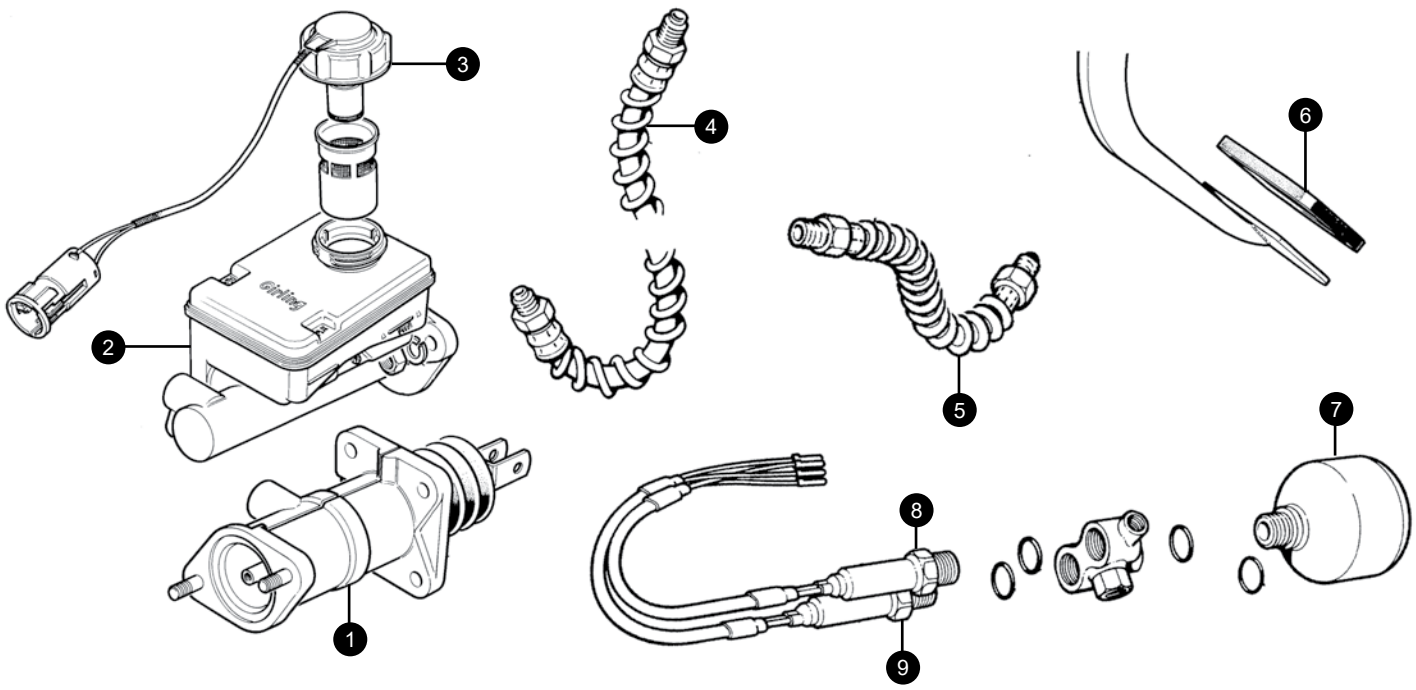

1. Brake master cylinder

XJ40 to 594575 (Girling)		JLM805	1
XJ40 from 594576 (Teves)			
	RHD	JLM1882	1
	LHD	JLM1883	1
X300		JLM12080	1

Brake master cylinder repair kit (not illustrated)

XJ40	to 594575	JLM806	1

Brake servo (not illustrated)

XJ40 to 667828		JLM1556	1

2. Brake fluid reservoir

XJ40	to 594575	JLM807	1
	RHD - from 594576	JLM1889	1
	LHD - from 594576	JLM1890	1

3. Brake fluid reservoir cap

XJ40	to 594575	JLM808	1
	from 594576	JLM1469	1

4. Front flexible brake hoses

STANDARD RUBBER

XJ40 to 594575	CAC8196	2
XJ40 from 594575	MNA5680AA	2
X300	MNA5680AA	2

FRONT STAINLESS STEEL BRAIDED

XJ40 to 594575	CAC8196SS	2
XJ40 from 594575	MNA5680AASS	2
X300	MNA5680AASS	2

5. Rear flexible brake hose

STANDARD RUBBER

XJ40 to 594575	CAC8199	1
XJ40 from 594575	CBC7640	1
X300	CBC7640	1

REAR STAINLESS STEEL

XJ40 to 594575	CAC8199SS	1
XJ40 from 594575	CBC7640SS	1
X300	CBC7640SS	1

6. Brake pedal rubber

XJ40	Manual	CAC9760	1
	Auto	C21515	1
X300	to 761041	C21515	1
	from 761042	MNA5378AA	1

7. Accumulator sphere

XJ40	to 594575	JLM11659	1
XJ40	from 594576	JLM1907	1

8. Brake charge switch

XJ40	to 594575	JLM1562	1

9. Low pressure warning switch

XJ40	to 594575	JLM1563	1

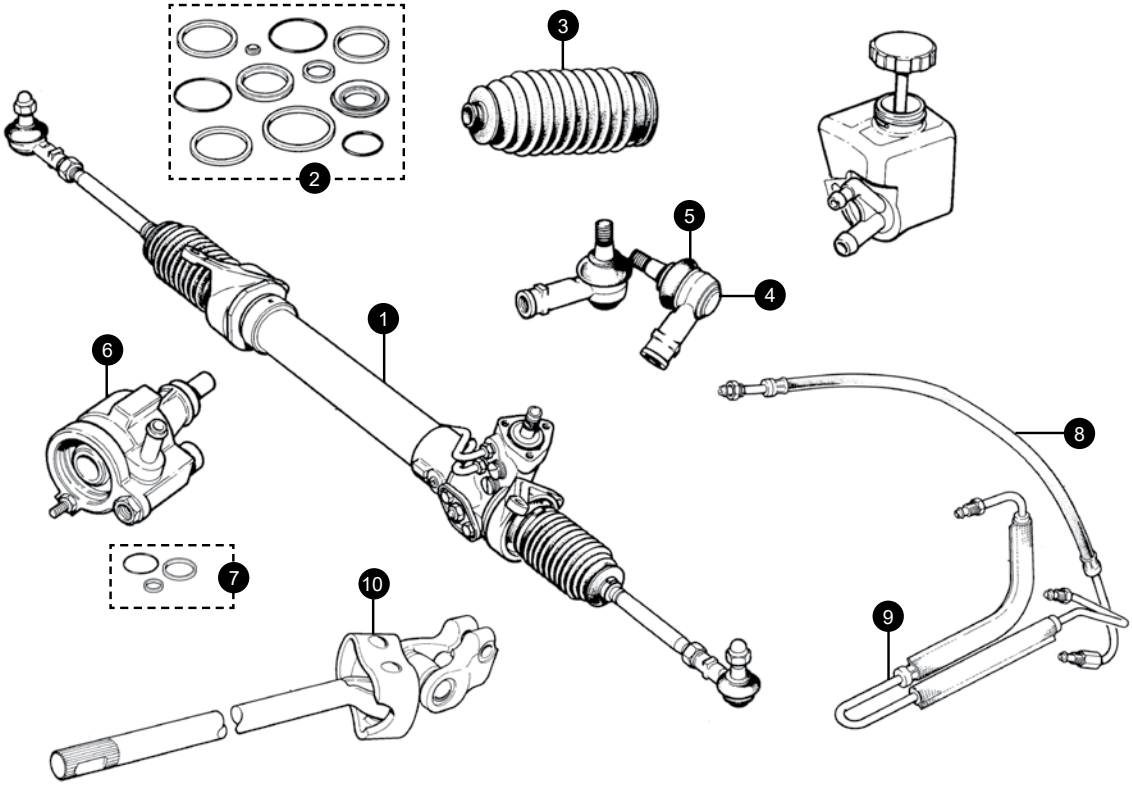

1. Reconditioned steering rack assembly		
XJ40 ADWEST type		
RHD	CCC6542	1
LHD	CCC6543	1
XJ40 ZF type		
RHD	CCC6542ZF	1
LHD	CCC6543ZF	1
X300		
RHD	MNA3890ABR	1
LHD	MNA3891ABR	1
2. Steering unit seal/repair kit		
XJ40 (not ZF)	JLM10838	1
3. Steering rack bellows		
XJ40	JLM1103	2
X300	JLM11688G	2
4. Track rod end	JLM1098	2
5. Track rod end gaiter	EAW2270J	2
6. Power steering pump		
XJ40	MMD8110AA	1
X300	MNA8110ABE	1
7. Power steering pump seal set		
XJ40	AEU2787	1

8. Low pressure steering hose		
XJ40 to 594575	CAC9992	1
X300		
RHD	MNA3986AB	1
LHD	MNA3987AC	1
X300 cooler to reservoir	MNA3990AC	1
X300 reservoir to pump	MNA3980AC	1
9. High pressure steering hose		
XJ40 (except 6.0)		
RHD to 667828	CCC7568	1
LHD to 692843	MMB3985BA	1
RHD from 667829	MMD3984AA	1
LHD from 692844	MMD3985AA	1
X300 (except 6.0)		
RHD	MNA3982BC	1
LHD	MNA3983BC	1
10. Steering universal joint sealed assembly		
XJ40 early cars lower	CAC7732	1
XJ40 early cars upper	CAC7731	1

COOLING

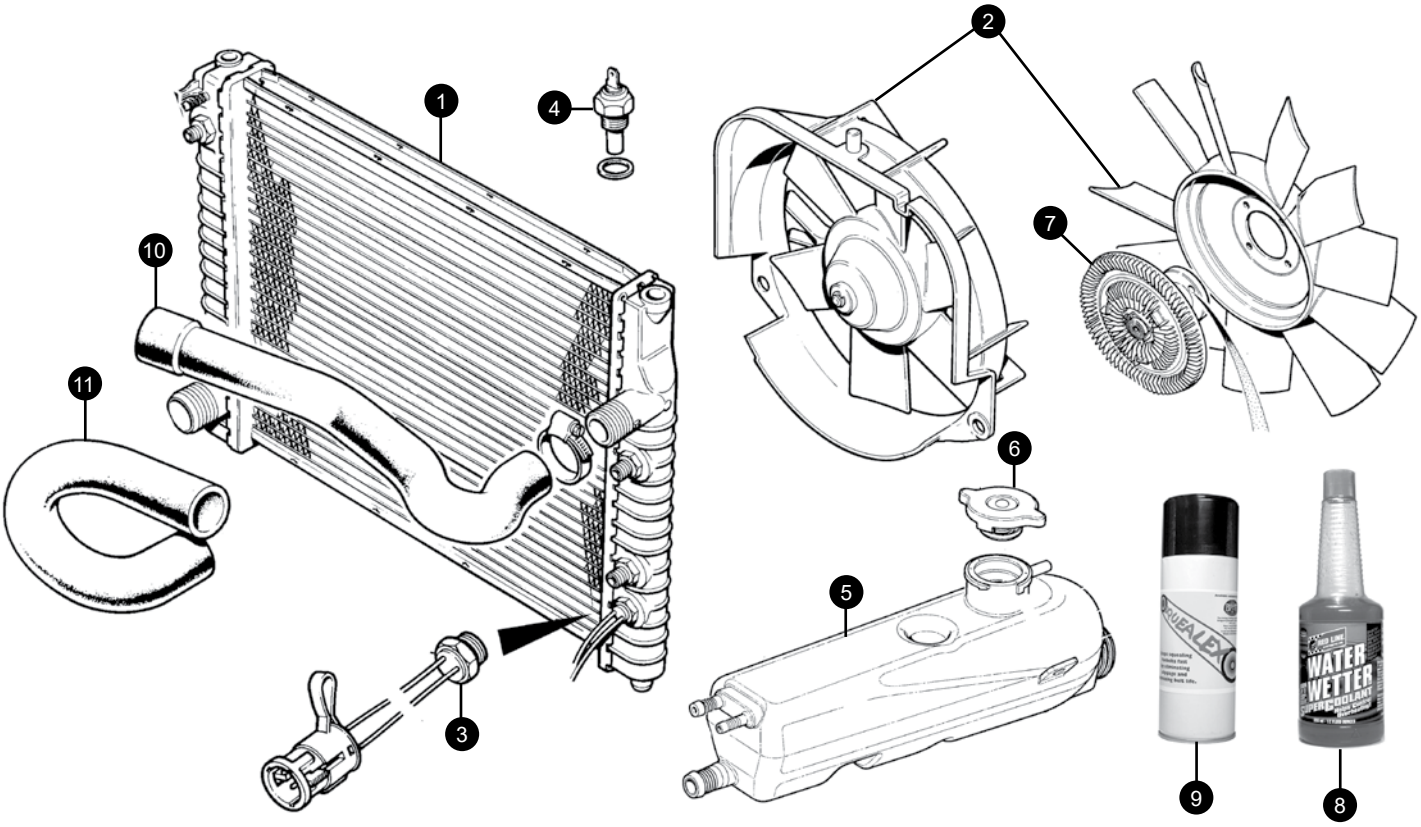

1. Radiator assembly

XJ40	chassis number reqd.	POA	1
X300	manual	MNA4190EB	1
X300	auto	MNA4190DB	1
X300	supercharged MNA4190AA	1	

X300 cooling module mounting
Not illustrated MNA4241AB 1

2. Radiator cooling fan & cowl
XJ40 mechanical fan EAC9367 1
XJ40 electrical motor, fan & cowl
to 667828 CAC9702 1

XJ40 3.2/4.0 electrical motor, fan & cowl
VIN 667829 on MNC4270AC 1

X300 Motor, fan & cowl MNC4270AC 1

3. Thermostatic fan switch
XJ40 2.9/3.6 to 629285 DBC2145 1
XJ40 3.2/4.0 DBC10013 1
X300 DBC10013 1

4. Temperature gauge sender
XJ40/X300 all models DAC2583 1

5. Radiator header/expansion tank
Radiator/Expansion tank
XJ40 to 594575 JLM1433 1
XJ40 594576 to 629285 JLM1810 1
XJ40 from 629286 MMB4400AA 1
X300 from 720125 MNA4400AD 1

6. Header Tank Cap
XJ40 2.9/3.6 from 594575 CCC6707 1
XJ40 3.2/4.0 MNA4440AA 1
X300 fluid level sender LNA5740AB 1

7. Viscous fan coupling
XJ40 to 667828 EAC4751 1

8. Water Wetter miracle coolant CH2077 1

Simply add to the coolant on your Jaguar and it can reduce the running temperature of your cooling system by up to 20º Farenheit

9. Squealex belt squeal inhibitor SQUEALEX 1

Stops fanbelts squealing in situ with a single sprayed application. The answer to the prayers of anyone who suffers with squealing drivebelts on any make of vehicle.

10. Top hose
XJ40 & X300 MNA4500BA 1

11. Bottom hose
XJ40 to 667828 CBC6440 1
XJ40 from 667829 CCC3844 1
X300 except 4.0 non S/C (w/o heater plug) MNA4510BF 1
X300 except 4.0 S/C (w/o heater plug) MNA4510AG 1

+44 1746 765432
sales.uk@sngbarratt.com
+33 385 201420
france@sngbarratt.com
018 01 833 833 (DE only)
sales.de@sngbarratt.com
+31 13 521 1552
sales.nl@sngbarratt.com
+1 800 452 4787
sales.usa@sngbarratt.com

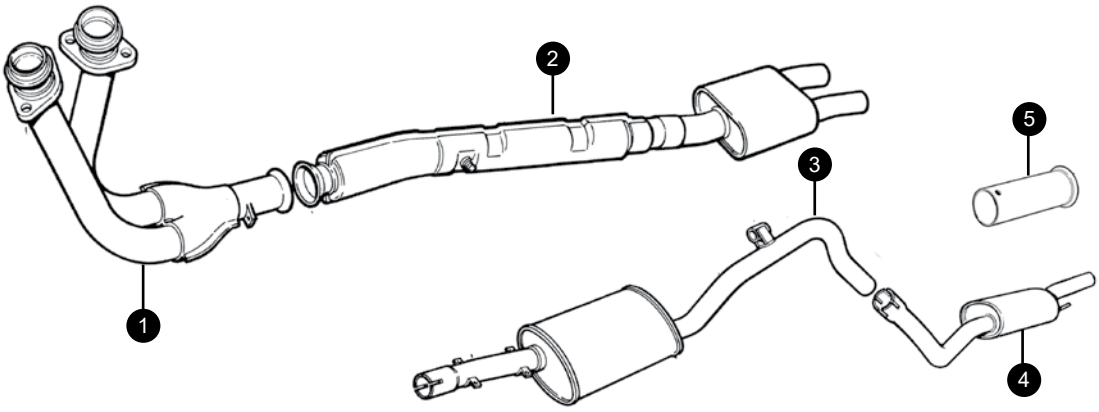

XJ40 2.9 & 3.6 - NON CATALYST from 1987 - 1991

1. Front downpipe	CAC6185
2. Intermediate pipe & silencer	CBC5386
3. Intermediate silencer	
RH	CBC5388
LH	CBC5389
4. Rear silencer	
RH to 566603	CBC2802
LH from 566603	CBC2803
RH from 566604	CBC8784
LH from 566604	CBC8785
5. Rear finishers	CBC7322

XJ40 3.2 & 4.0 - NON CATALYST from 1991 to 1993

1. Front downpipe	
3.2 from 629286	CBC6373
4.0 from 594576	CBC6373
2. Intermediate exhaust pipe & silencer	
3.2 from 629286	CBC7220
4.0 from 594576	CBC7220
3. Intermediate exhaust silencer	
3.2 RH	EBC10076
4.0 LH	EBC10077
4. Exhaust silencer	
RH to 660154	CBC8784
LH to 660154	CBC8785
RH from 660155	EBC10968
LH from 660155	EBC10969
5. Rear finishers	CBC7322

X300 3.2 & 4.0 from 667829 TO 708757 - CATALYST

1. Front downpipe & catalyst	
3.2 & 4.0 spherical JOINT	JLM20704
2. Centre catalyst only, reproduction ball fitting	CATCON03
3. Intermediate exhaust silencer	
3.2 & 4.0 except LWB RH	EBC10076
3.2 & 4.0 except LWB LH	EBC10077
4. Exhaust silencer	
3.2 & 4.0 except LWB RH	EBC10968
3.2 & 4.0 except LWB LH	EBC10969
5. Rear finishers	CBC7322

X300 3.2 & 4.0 CATALYST from 720125 to 812255 from 1995 to 1997

1. Front downpipe & catalyst	
3.2/4.0 Slip joint	NBC6711CC
3.2/4.0 Spherical joint	NBC6711FB
2. Centre Catalyst	
3.2/4.0 to 754303 slip joint	NNA6752CA
3.2/4.0 from 754304 slip joint	NNA6752GA
3.2/4.0 Spherical joint	NNA6752CB
3. Intermediate exhaust silencer	
3.2/4.0 except LWB RH	NNA6760AC
3.2/4.0 except LWB LH	NNA6761AC
3.2/4.0 LWB RH	NXF6760AD
3.2/4.0 LWB LH	NXF6761AD
4. Exhaust silencer	
3.2/4.0 RH	NNA6784BC
3.2/4.0 LH	NNA6785BC
5. Rear finishers	NNE6723AA

FUEL SYSTEM

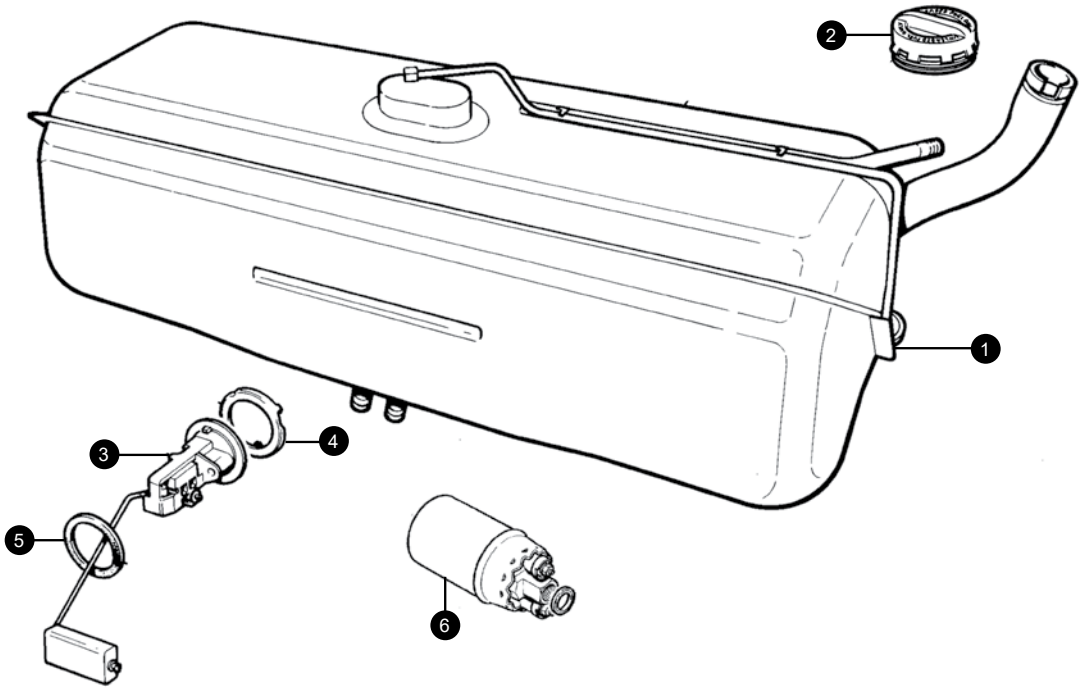

1. Fuel tank			
XJ40 to '90	Remote pump, non evap. loss	CBC8803/1	1
XJ40 90 on	Immersed pump	EBC10094/1	1
X300, Normally aspirated		C2A1524	1
2. Fuel tank cap			
XJ40 to 667828		CBC5292	1
XJ40 667829		NJD5924BB	1
X300		NJD5924BB	1
3. Fuel level sender unit			
XJ40 Non immersed pumps to 629285		DBC10284	1
XJ40 Immersed pumps from 629285		DBC12042	1
X300 Normally aspirated		DBC12042	1
X300 Supercharged		DBC12042	1
4. Locking ring		ARA1501J	1
5. Sealing ring		ARA1502J	1
6. Fuel Pump			
XJ40 2.9/3.6/3.2/4.0 remote		EBC11580	1
XJ40 3.2/4.0 immersed		EBC11365	1
X300 all models		JLM12204	1

+44 1746 765432
sales.uk@sngbarratt.com
+33 385 201420
france@sngbarratt.com
018 01 833 833 (DE only)
sales.de@sngbarratt.com
+31 13 521 1552
sales.nl@sngbarratt.com
+1 800 452 4787
sales.usa@sngbarratt.com

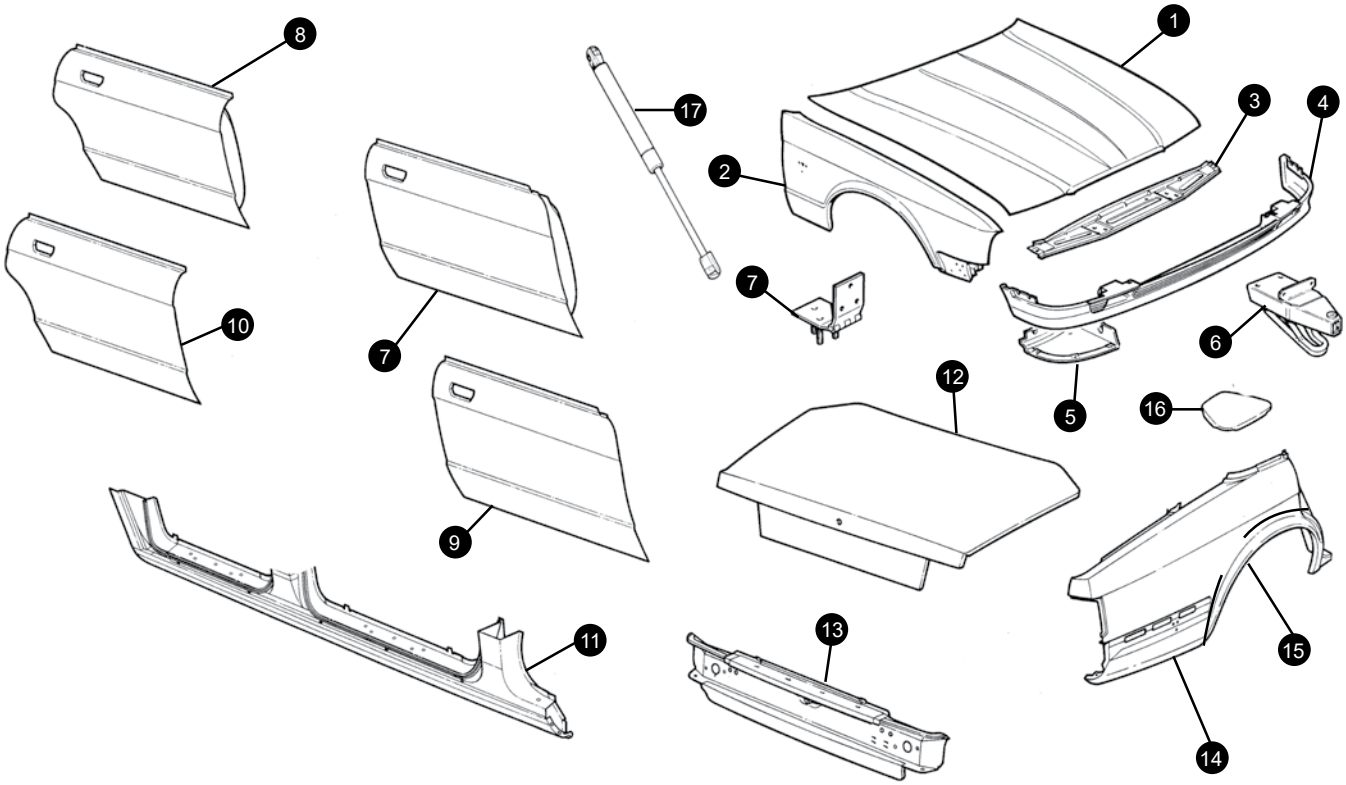

Please note that whilst XJ40 panels are shown in the illustration the relevant X300 items are fully detailed within the listing.

I. XJ40 Bonnet	to 667828	JLM1766	1
	from 667829	JLM11006	1
X300 Bonnet		JLM20481	1
Bonnet liner	to 662799	BEC8375	1
	from 662800 to 667828	BEC22722	1
	from 667829		
GMB9340AB 1			
2. XJ40 Front wing			
to VIN 629285		RH	
CAP520 1			
	LH	CAP521	1
from 629286 to 687218	RH	CAP5122	1
	LH	CAP5123	1
from 687219	RH	BLC1160	1
	LH	BLC1161	1
X300 Front wing	RH	AXX1516	1
	LH	AXX1517	1
3. XJ40 Bonnet hinge platform			
	from 667828	CAP861	1
	to 667829	CAP6296	1
X300 Bonnet hinge platform		FNC3877AA	1
4. XJ40 Front spoiler	to 667828	BDC7042	1
	from 667829	BEC5616	1
5. XJ40 Undertray			
to 667828	RH	BDC7494	1
	LH	BDC7495	1
from 667829	RH	BEC1236	1
	LH	BEC1237	1
X300 Undertray		BEC19939	1
Fitting kit		BEC19939KIT	1
6. Bonnet hinge			
XJ40		CAP1326	2
X300	RH	AXX1300	1
	LH	AXX1301	1
7. Front door			
XJ40 to 594575	RH	JLM2180	1
	LH	JLM2181	1
XJ40 594576 to 667828	RH	JLM2184	1
	LH	JLM2185	1
XJ40 667829 to 687218	RH	JLM11012	1
	LH	JLM11013	1

XJ40 687219 on	RH	JLM11502	1
	LH	JLM11503	1
X300	RH	JLM11722	1
	LH	JLM11723	1
8. Rear door			
XJ40 to 594575	RH	JLM2182	1
	LH	JLM2183	1
XJ40 594576 to 667828	RH	JLM2186	1
	LH	JLM2187	1
XJ40 667829 to 687218	RH	JLM11014	1
	LH	JLM11015	1
XJ40 from 687219	RH	JLM11504	1
	LH	JLM11505	1
X300 SWB	RH	JLM11724	1
	LH	JLM11725	1
X300 LWB	RH	JLM12258	1
	LH	JLM12259	1
9. Front door skin			
XJ40 to 594575	RH	JLM234	1
	LH	JLM235	1
XJ40 594576 on	RH	JLM11026	1
	LH	JLM11027	1
X300	RH	FNA1032AE	1
	LH	FNA1033AE	1
10. Rear door skin			
XJ40 to 594575	RH	JLM236	1
	LH	JLM237	1
XJ40 594576 on	RH	JLM11028	1
	LH	JLM11029	1
11. XJ40 Outer sill	RH	JLM11348	1
	LH	JLM11349	1
X300 SWB Outer sill	RH	JLM20294	1
	LH	JLM20295	1
X300 LWB Outer sill	RH	JLM20296	1
	LH	JLM20297	1
12. XJ40 Boot lid			
to 667828		CAP567	1
667829 on		CAP6267	1
X300 Boot lid			
Long number plate (UK style)		AXX1662	1
Short number plate (US style)		AXX1505	1
13. Rear panel			
XJ40		CAP20	1
X300		FNA2153AD	1
14. Rear wing			
XJ40 to 667828	RH	CAP516	1
	LH	CAP517	1
XJ40 667829 on	RH	CAP6090	1
	LH	CAP6091	1
X300 (without lamp hsg)	RH	FNA1320AH	1
	LH	FNC3321AA	1
15. XJ40 wheel arch repair panel			
	RH	CAP516RP	1
	LH	CAP517RP	1
16. Fuel filler lid			
XJ40 to 629285		CAP723	1
XJ40 629286 on		CAP5121	1
X300		FNA1408AB	1
17. Gas struts			
Bonnet			
XJ40		BBC2856	1
X300		BEC19809	1
Trunk lid			
XJ40 (not JaguarSport)		BEC13514	1
XJ40 JaguarSport		SPB1260	1
X300		GNA3800AB	1

+44 1746 765432
sales.uk@sngbarratt.com
+33 385 201420
france@sngbarratt.com
018 01 833 833 (DE only)
sales.de@sngbarratt.com
+31 13 521 1552
sales.nl@sngbarratt.com
+1 800 452 4787
sales.usa@sngbarratt.com

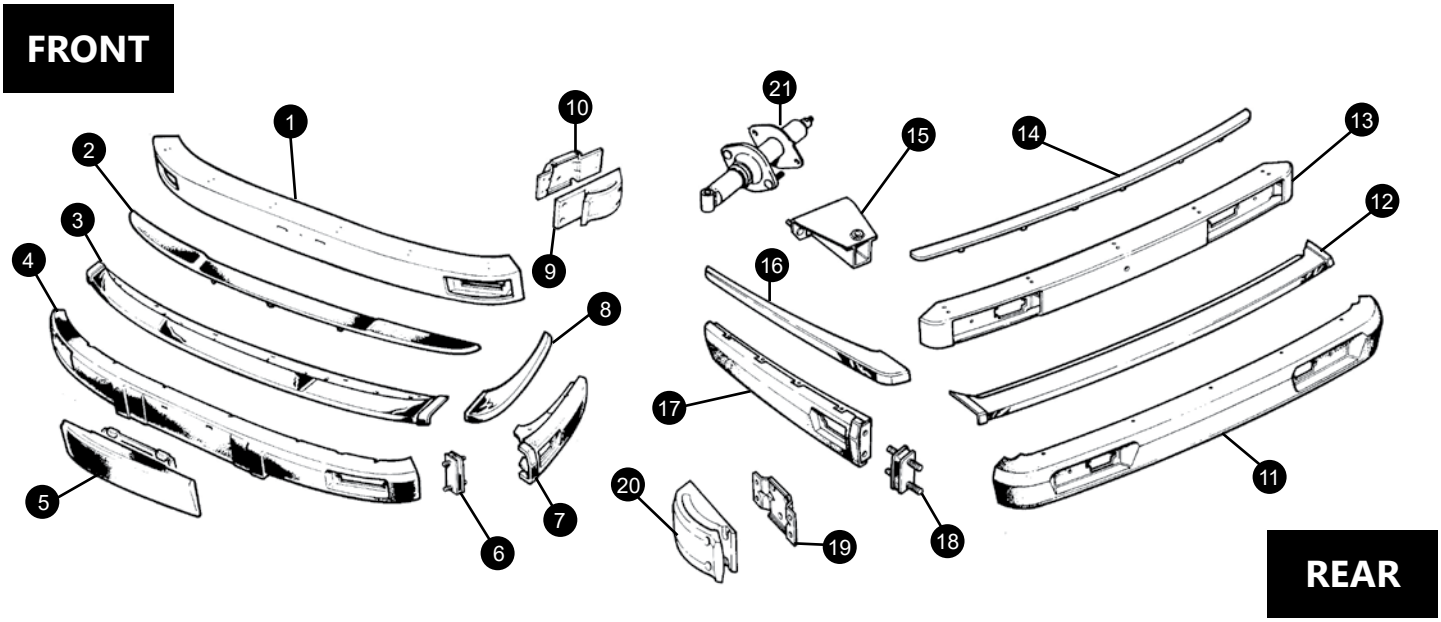

FRONT

1. Armature			
European markets	to 667828	BEC24866	1
	667829 on	BEC24870	1
North American markets	to 667828	BEC16687	1
	667829 on	BEC24383	1
2. Finisher			
to 667828		BAC6224	1
667829 on		BEC14082	1
3. Blade			
Powerwash to 667828		BBC7286	1
Single washer jet	to 667828	BEC8992	1
Twin washer jets	to 667828	BCC7292	1
Non powerwash	from 667829	BEC24150	1
Twin washer jets	from 667829	BEC24151	1
4. Rubber cover		BDC5098	1
5. Cover insert		BDC4076	1
6. Mounting block	to 573113	BBC2298	
7. Side capping	RH	BDC6776	1
	LH	BDC6777	1
8. Side finisher			
from 667828	RH	BBC7284	1
	LH	BBC7285	1
from 667829	RH	BEC24862	1
	LH	BEC24863	1
9. Guide block		HMB6454AA	2
10. Mounting bracket	RH	BDC4776	1
	LH	BDC4777	1
Gasket for bracket		BEC15560	2
Bumper fixing kit	to 667828	JLM11063	1

REAR

11. Rubber cover		BBC9492	1
12. Blade	to 667828	BCC7300	1
	from 667829	BEC24152	1
13. Armature			
European markets		HMB6580AA	1
North American markets	to 667828	BEC16962	1
	from 667829	BEC23245	1
14. Finisher		BAC6301	1
15. Mounting European markets only		BDC9436	1
16. Side finisher			
to 667828	RH	BCC7298	1
	LH	BCC7299	1
from 667829	RH	BEC23046	1
	LH	BEC23047	1
17. Side capping	RH	BEC6588	1
	LH	BEC6589	1
18. Mounting to 556851		BBC2298	1
19. Bracket		HMD6556AA	1
20.Guide block		BBC7088	2
21. Impact absorber			
North American markets only		BDC3168	2

X300 BUMPERS

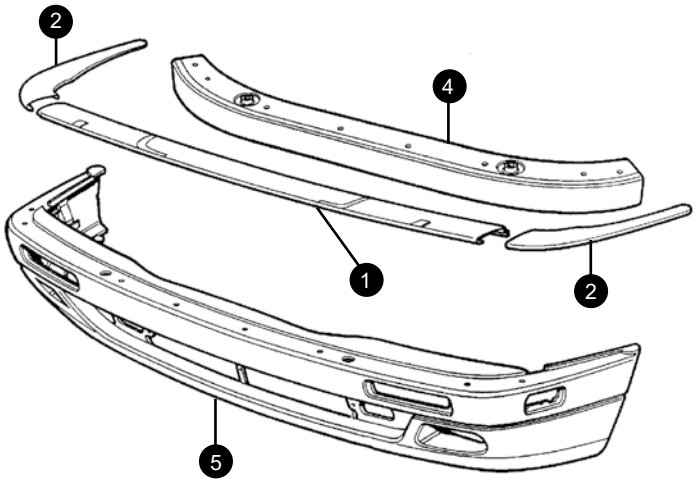

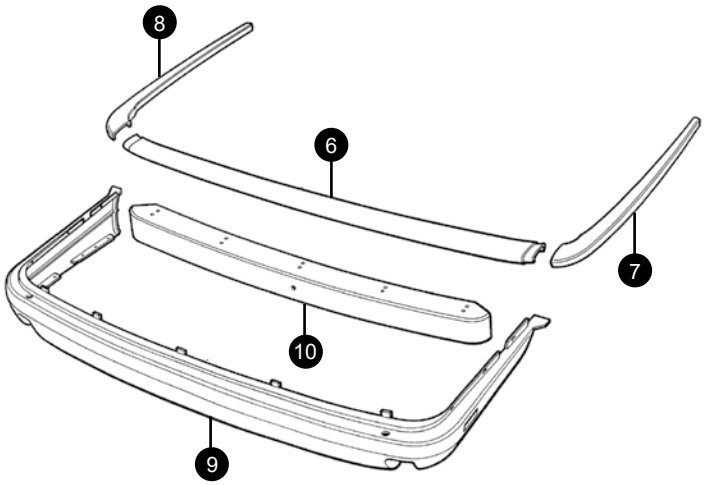

1. Front centre bumper blade		
Non powerwash	BEC25496	1
Powerwash	BEC25497	1
2. Bumper blade RHF	BEC19932	1
3. Bumper blade LHF	BEC19933	1
4. Front bumper beam		
Non energy O.E.	HNC6460AB	1
Non energy aftermarket	BEC25572	1
Energy absorbing O.E.	HNA6460BA	1
Mounting bracket (except energy absorbing bumpers)	BEC25563	2

5. Bumper cover front	BEC19902XXX	1
6. Rear centre bumper blade	BEC19956	1
7. Bumper blade RHR	BEC19960	1
8. Bumper blade LHR	BEC19961	1
9. Bumper cover rear	BEC23341XXX	1
10. Rear bumper beam		
Non energy absorbing	HNC6580AA	1
Energy absorbing	BEC19918	1
Mounting bracket (except energy absorbing bumpers)	HNG6567AA	2

OVERMATS

FOOTWELL OVERMATS (SET OF 4)

Quality carpet footwell overmats made to match the exact shape of your front and rear footwells.

XJ40

Black	RHD	OMXJ40/1R
Grey	RHD	OMXJ40/2R
Beige	RHD	OMXJ40/8R

X300

Black	RHD	OMX300/1R
Grey	RHD	OMX300/2R
Beige	RHD	OMX300/8R

+44 1746 765432
sales.uk@sngbarratt.com

+33 385 201420
france@sngbarratt.com

018 01 833 833 (DE only)
sales.de@sngbarratt.com

+31 13 521 1552
sales.nl@sngbarratt.com

+1 800 452 4787
sales.usa@sngbarratt.com

GLIPTONE LIQUID LEATHER

Feeds and restores not only the feel of tired leather, but the smell too!

Conditioner	CH5001
Cleaner	CH5002

3

4

1. Stainless Steel Wheel Arch Kit

XJ40	SBS1332	1
X300	SBS1337	1
2. Alloy gearknob	JLM20501#	1
3. Locking wheel nut set	JLM21769	1

4. Hub Cap Badges Jaguar

Silver head on Green	MNA6249AB	4
Silver head on Grey	MNA6249GA	4
Silver head on Black	MXD6249CA	4
Silver head on Gold	MXD6249AA	4
Gold head on Ruby	MNA6249CB	4
Gold head on Black	MNA6249FA	4

Hub Cap Badges Daimler

Gold D on Ruby	MNA6249DB

5

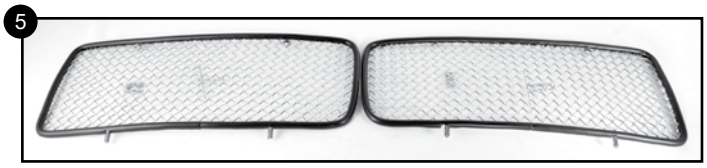

6

5. Radiator Grille Mesh

XJ40	MESH001	1
X300	MESH002	1

6. Reverse Park Sensor PARK1 1

1

2

7

7. Leaping Jaguar Mascots

7" fixed	BD10954
5" Fixed	BD29644*
X300 style spring loaded	HNA6350BD#

All of our leaping Jaguars are sold as mascots only and fitment to any part of your car is entirely at your own discretion.

Please note that whilst XJ40 parts are shown in the illustration the relevant X300 items are fully detailed within the listing.

1. Windscreen

XJ40		
Clear	BEC1010	1
Tinted	BEC1011	1
Heated to 687218	BEC25248	1
X300		
Tinted to 746813	JLM11268	1
Tinted from 746814	JLM20593	1
Heated & Tinted to 746813	JLM11269	1
Heated & Tinted from 746814	JLM20592	1

2. Windscreen seal

XJ40		
to 556850	BCC9213	1
form 556851	BEC25260	1
Windscreen mastic	BEC25457	1
X300		
to 773451	GMB8865AB	1
from 773452	GMB8865AC	1

3. Front door glass

XJ40			
LH Not LWB		BCC5317	1
RH Not LWB		BCC5316	1
X300			
RH	to 746813	GNA1000BB	1
	from 746814	GNA1000CC	1
LH	to 46813	GNA1001BB	1
	from 46814	GNA1001CC	1

4. Rear door glass

XJ40			
RH		BCC5318	1
LH		BCC5319	1
LWB RH		BEC26014	1
LWB LH		BEC26015	1
X300			
RH	to 746813	GNA2270AB	1
	from 746814	GNA2270BC	1
LH	to 746813	GNA2271AB	1
	from 746814	GNA2271BC	1
LWB RH		GXF2270AE	1
LWB LH		GXF22270AE	1

5. Rear quarterlight glass

XJ40		
RH	BEC19306	1
LH	BEC19307	1

6. Rear Screen

XJ40		
Europe	BEC16553	1
USA	BEC18145	1
X300		
Standard	GNA9021CB	1
High mounted stop lamp	GNA9021DB	1
LWB	GXF9021AB	1
LWB High mounted stop lamp	GXF9021BB	1

7. Rear screen seal

XJ40	BBC5889	1
Rear screen mastic	BEC25457	1
X300	GXF9024AA	1

8. Front door glass waist seal

XJ40		
RH	BEC5444	1
LH	BEC5445	1

9. Front door glass frame seal

XJ40		
RH	BEC24168	1
LH	BEC24169	1

10. Rear door glass frame seal

XJ40		
RH	HMB5322AA	1
LH	HMB5323AA	1
X300		
Bright Finish RH	GNA1710AE	1
Bright Finish LH	GNA1710BD	1
Black Finish RH	GNA1710BE	1
Black Finish LH	GNA1710BF	1

11. Rear door glass waist seal

XJ40		
RH	BEC5446	1
LH	BEC5447	1
X300		
Bright finish RH	GNA2520AE	1
Bright finish LH	GNA2520BC	1
from 754304 to 787953	GNA2520BE	1
from 787954	GNA2520BF	1

12. Boot lid seal

XJ40	BEC10747	1
X300		
to 757397	HNA5370AE	1
from 757398	HNA5370AH	1

13. Bonnet front seal

XJ40		
to 667828	BEC9008	1
from 667829	BEC11370	1
X300	BEC19687	1

+44 1746 765432
sales.uk@sngbarratt.com
+33 385 201420
france@sngbarratt.com
018 01 833 833 (DE only)
sales.de@sngbarratt.com
+31 13 521 1552
sales.nl@sngbarratt.com
+1 800 452 4787
sales.usa@sngbarratt.com

14. Bonnet rear seal		
XJ40	BEC9009	1
Bonnet buffer (not illustrated)	BEC10761	4
X300	HNA5243BC	1
X300 side seal	HNA5244AE	2
Bonnet buffer (not illustrated)	FNA1019AA	4
15. Door handle gasket		
XJ40		
Front to 594575	BBC7491	2
LHF from 667829	BEC8691	1
RHF from 667829	BEC8690	1
Rear from 667829	BEC8692	1
16. Sunroof seal		
XJ40	BDC5374	1
X300	HNG1727AB	1
17. Boot lid lock finisher seal		
XJ40	BBC3882	1

X300 Plain	HNA6149BA	1
X300 Fluted	HNA6149AB	1
18. Front door seal		
XJ40		
Front to 667828	BEC21300	2
Front from 667829	HMD5301AB	2
X300		
RHF	HNA5300AD	1
LHF	HNC5301AC	1
19. Rear door seal		
XJ40		
RHR	BEC21304	1
LHR	BEC21305	1
X300		
RHR	HNC5302AB	1
LHR	HNC5303AB	1
LWB RHR	HNC5302BB	1
LWB LHR	HNC5303BB	1

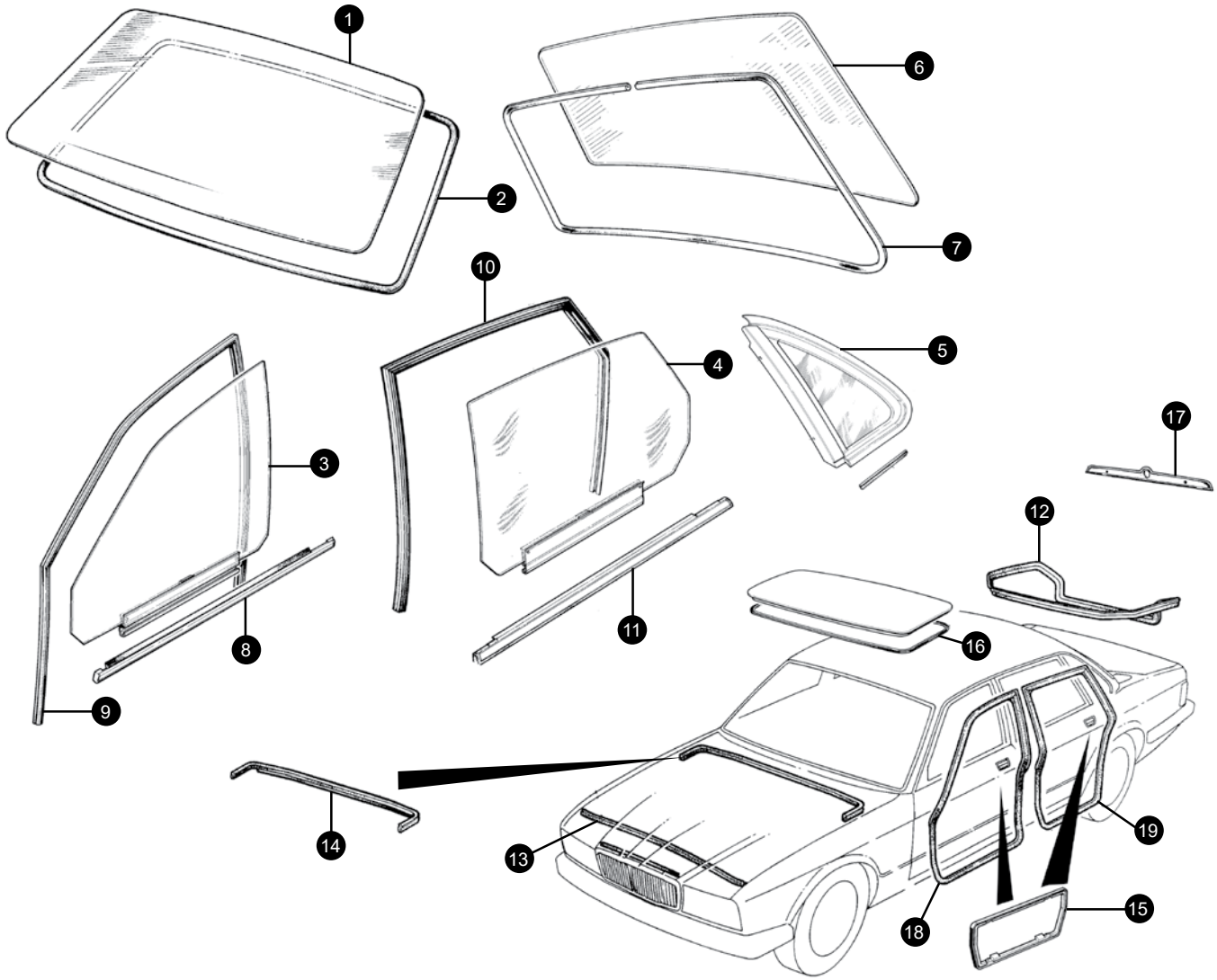

XJ40 LAMPS

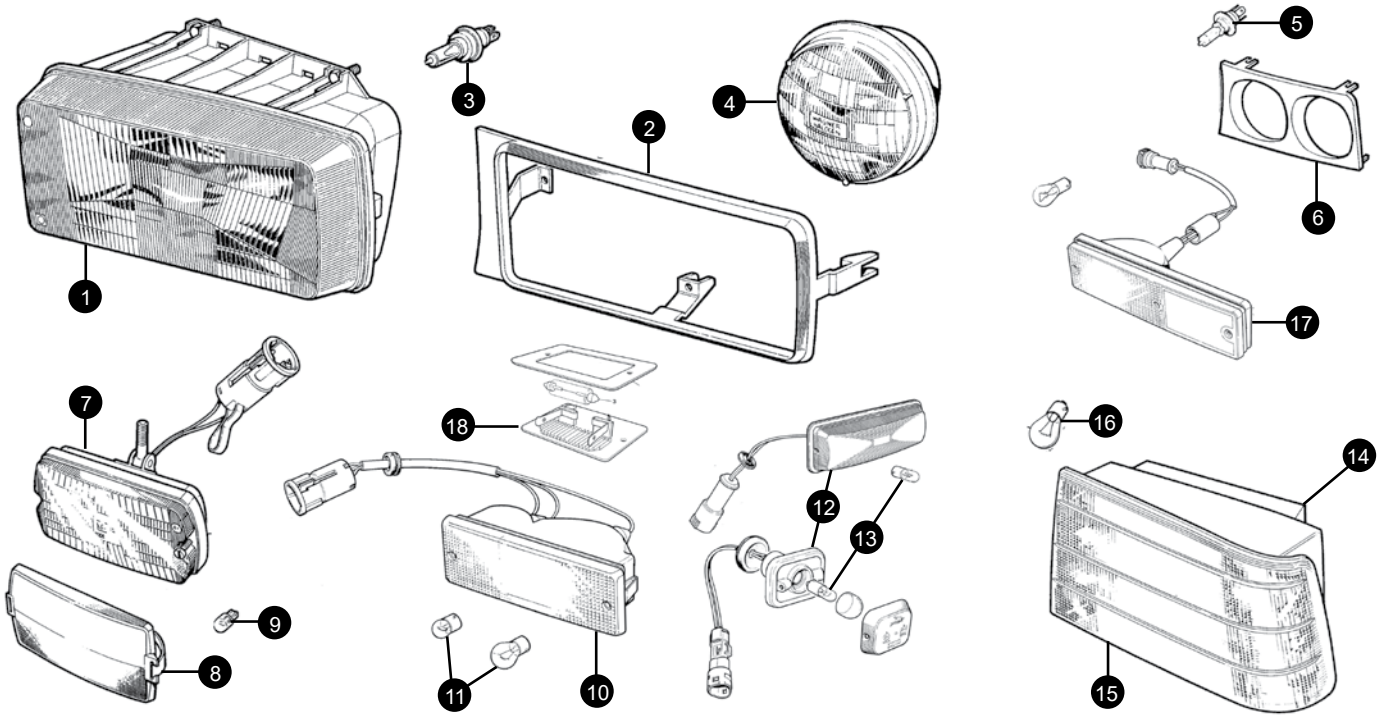

1. Headlamp square		
RH RHD	JLM10874	1
LH RHD	JLM10875	1
RH LHD	JLM10872	1
LH LHD	JLM10873	1
2. Headlamp finisher		
RH	JLM1325	1
LH	JLM1324	1
3. Bulb	DBC11404	2
4. Headlamp round		
Inner	JLM173	2
Outer RHD	JLM175	2
Outer LHD	JLM174	2
5. Bulb	DBC11404	4
6. Headlamp double bezel		
RH	BEC9040	1
LH	BEC9041	1
7. Foglamp		
to 1989	DBC3753	2
1989 on	DBC4320	2
VIN 667829 on		
RH	DBC11788	1
LH	DBC11789	1
8. Cover for DBC3753/DBC4320	JS728	2
9. Foglamp bulb		
to 667828	JLM9588	2
from 667829	DBC11408	2
10. Sidelamp/indicator lamp		
RH	DBC2044	1
LH	DBC2045	1

11. Bulbs		
Side	JLM9587	2
Indicator	DBC11382	2
12. Side repeater lamp		
Early	DBC3323	2
Late	DBC12304	2
13. Bulb	DBC11380	2
14. Rear lamp		
Plain red/amber RH	DBC11642	1
Plain red/amber LH	DBC11643	1
Black red/amber RH	DBC11644	1
Black red/amber LH	DBC11645	1
15. Rear lamp lens		
Plain red/amber RH	DBC11642LENS	1
Plain red/amber LH	DBC11643LENS	1
Black red/amber RH	DBC11644LENS	1
Black red/amber LH	DBC11645LENS	1
16. Bulb		
Single filament	DBC11382	6
Twin filament	JLM9587	2
Chrome finisher (not illustrated)		
RH	JLM20339	1
LH	JLM20340	1
17. Rear foglamp	DBC2594	1
Lens	JLM1059	1
Bulb	DBC11382	1
18. Number plate lamp	DBC12441	1
Bulb	LNA5180AA	2

+44 1746 765432
sales.uk@sngbarratt.com
+33 385 201420
france@sngbarratt.com
018 01 833 833 (DE only)
sales.de@sngbarratt.com
+31 13 521 1552
sales.nl@sngbarratt.com
+1 800 452 4787
sales.usa@sngbarratt.com

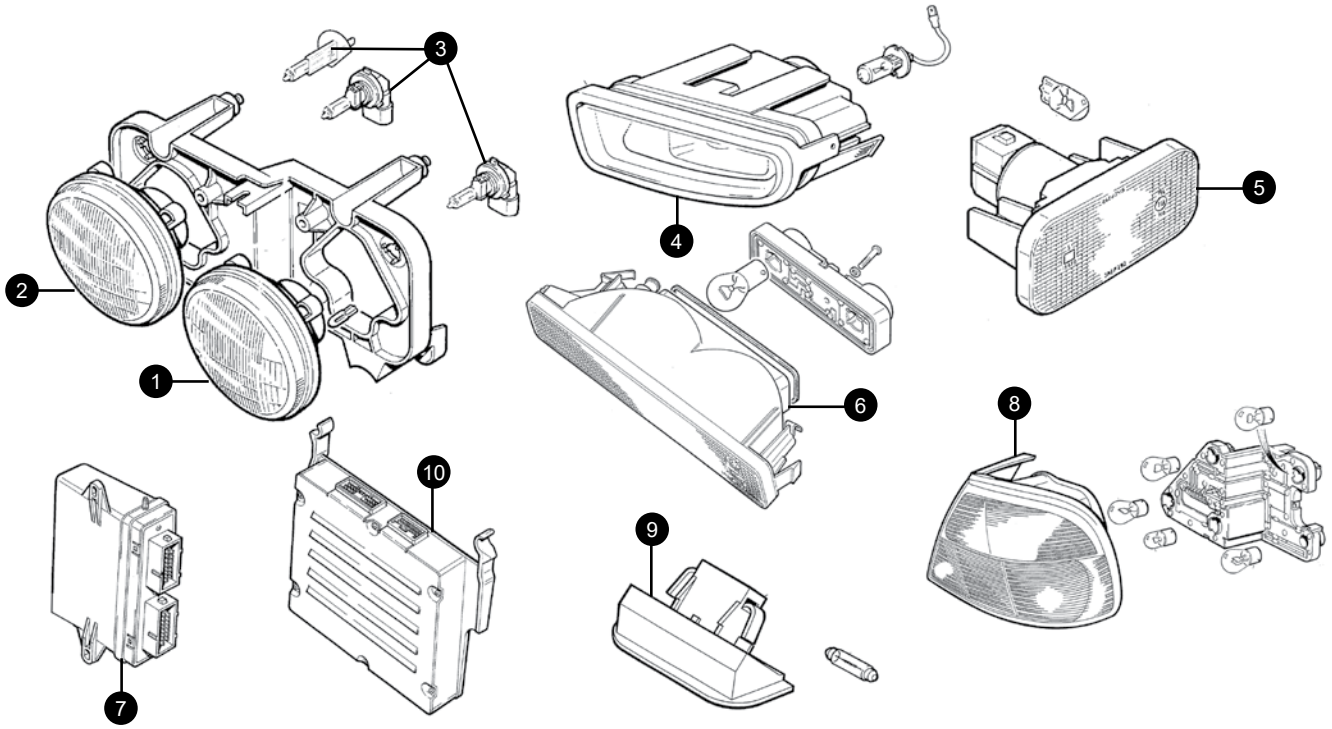

1. Outboard lens for headlamp levelling		
RHD UK SPEC	JLM12414	2
LHD EURO SPEC	JLM12413	2
Outboard headlamp for non headlamp levelling		
CAN/USA	JLM12415	2
2. Inboard lens for headlamp levelling		
RHD UK/EURO SPEC	JLM12110	2
Inboard headlamp for non headlamp levelling		
CAN/USA	JLM12113	2
3. Headlamp bulb		
UK/Europe	DBC11406	4
High beam CAN/USA	DBC11314	4
Low beam CAN/USA	DBC11313	4
4. Front foglamp		
RH	DBC11016	1
LH	DBC11017	1
5. Side repeater	LNA4812AB	2
6. Front direction indicator		
RH	LNA4800AB	1
LH	LNA4801AB	1
7. Front lamp control module	LNA2240AA	2
8. Rear Lamp		
RH red rim with foglamp	LNA4900BC	1
LH red rim with foglamp	LNA4901BC	1
RH chrome rim with foglamp	LNA4900CC	1
LH chrome rim with foglamp	LNA4901CC	1
RH chrome rim no foglamp	LNA4900EC	1
LH chrome rim no foglamp	LNA4901EC	1
9. Number plate lamp	LNA5070AC	2
Bulb	LNA5180AA	2
10. Rear lamp control module		
to 739426	LNA2245AB	2
from 739427	LXF2245AA	2
NON ILLUSTRATED PARTS		
Courtesy lamp		
RH to 798565	LNA5361AD	1
RH from 798566	LNA5360AD	1
LH to 798565	LNA5360AD	1
LH from 798566	LNA5361AD	1
Courtesy lamp bulb	DBC11381	2
Puddle Lamps		
LHF	LJA5371AB	1
RHF	LJA5370AB	1
LHR	LJA5371AB	1
RHR	LJA5370AB	1
Puddle lamp bulb	DBC11381	4
Trunk lamp	LNA5380BA	2
Trunk lamp bulb	LNA5180AA	2

GENERAL ELECTRICS

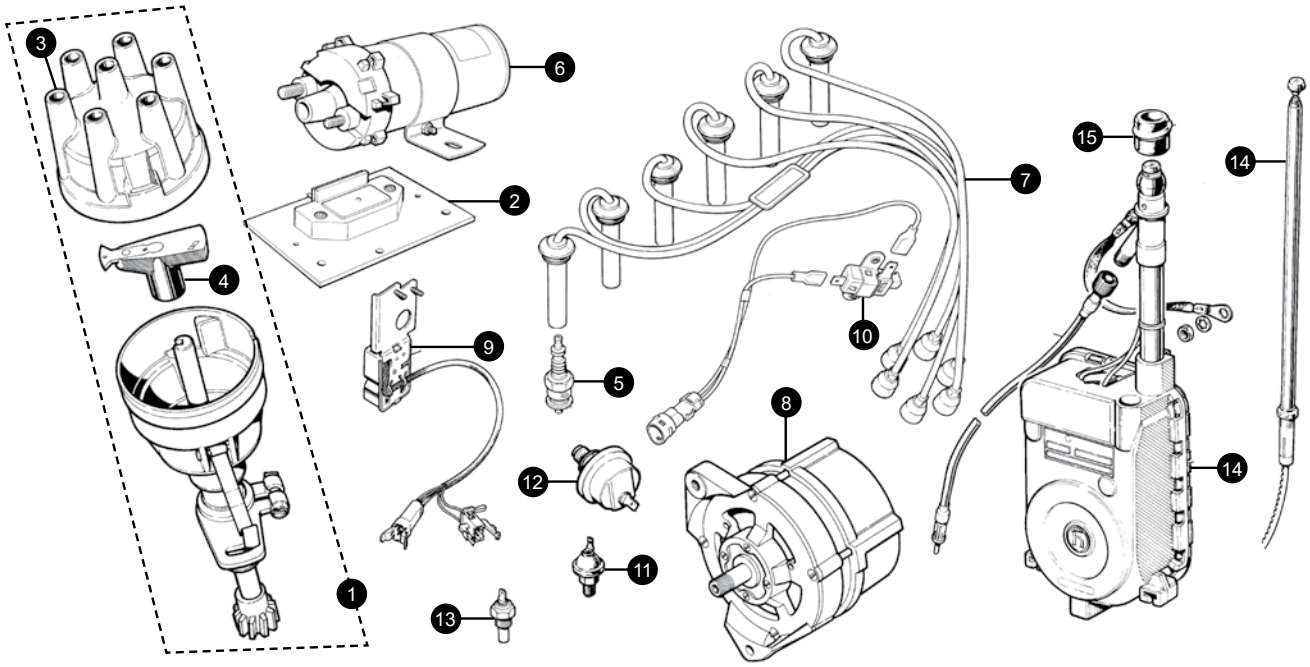

1. Distributor assembly			
XJ40 2.9		DAC8525	1
XJ40 3.2/3.6/4.0		DBC2690	1
X300 6.0		DAC4758	1
2. Ignition amplifier			
XJ40 6 cyl		DAC10923	1
XJ40 V12		DAC11520	1
3. Distributor cap			
XJ40 2.9		JLM838	1
XJ40 3.2/3.6/4.0		JLM150	1
4. Rotor arm			
XJ40 2.9		JLM839	1
XJ40 3.2/3.6/4.0		JLM381	1
5. Spark plug			
XJ40 2.9		EBC8523	6
XJ40 3.2/3.6/4.0		EBC11480	6
6. Ignition coil			
XJ40 2.9		DLB125	1
3.2/3.6/4.0		DLB198	1
7. HT lead set			
XJ40 2.9		DBC3228	1
XJ40 3.2/3.6/4.0		DAC7811	1
XJ40 6.0		LHD1509AA	1
8. Alternator			
XJ40 2.9/3.6 to 1991 Bosch 80 amp		JLM153	1
XJ40 2.9/3.6/4.0 to 1991 Bosch 90 amp		DBC3067	1
XJ40 3.2/4.0 1992 Bosch 115 amp		DAC5224	1
XJ40 3.2/4.0 1993-94 120 amp		DBC6819	1
X300 to 787953		DBC6819	1
X300 from 787954		LNA1800DA	1
X300 4.0 supercharged / 6.0		LNA1800DA	1
9. Brake light switch			
XJ40 594576 to 667828		DBC5869	1
XJ40 from 667829			
Non cruise		DBC10799	1
Cruise		DBC10800	1
X300	With speed control	LNB6420BA	1
(If replacing this part, link harness LNB3022AA will be required)			
X300	Without speed control	LNB6420AA	1
(If replacing this part, link harness LNB3022AA will be required)			
10. Handbrake warning light switch			
XJ40 non handed type		ADU2888J	1
XJ40 to 629285	RHD	DBC1818	1
	LHD	DBC1819	1
XJ40 629286 to 667828	RHD	DBC6292	1
	LHD	DBC6293	1
XJ40 667829 on	RHD	DBC6586	1
	LHD	DBC6587	1
X300	RHD	LNA6530AA	1
	LHD	LNA6531AA	1
11. Oil pressure warning light switch			
XJ40/300		JLM20791	1

+44 1746 765432
sales.uk@sngbarratt.com
+33 385 201420
france@sngbarratt.com
018 01 833 833 (DE only)
sales.de@sngbarratt.com
+31 13 521 1552
sales.nl@sngbarratt.com
+1 800 452 4787
sales.usa@sngbarratt.com

12. Oil pressure sender unit		
XJ40 early to 1989	C46272	1
XJ40 late 1989 on	DAC11141	1
X300 from engine number 134020/116206		
	LNA5642AA	1
13. Temperature sender unit		
XJ40/X300	DAC2583	1
14. Radio aerial assembly		
XJ40 to 687218	LMB4120AA	1
XJ40 from 687219	LMD4120AA	1
X300	LNA4120AA	1
15. Mast		
XJ40 to 687218	DBC2200	1
XJ40 from 687219	LNA4134AA	1
X300	LNA4134AA	1
16. Grommet		
XJ40 to 687218	DBC2246	1
XJ40 from 687219	LMD4131AA	1
X300	LMD4131AA	1

OILS, FLUIDS & CONSUMABLES

We stock a full range of quality Morris Lubricants (blending oils in Shrewsbury since 1869) that are entirely suitable for both the classic and current Jaguar range.

Oil 20W/50	gallon	MOR001
Oil 20W/50	1 litre	MOR002
Oil 15W/50	5 litre	MOR004
Oil 15W/50	1 litre	MOR005
Oil 1OW/40	semi synthetic - 5 litre	MOR007
Oil 1OW/40	semi synthetic - 1 litre	MOR008
Oil 5W/30	semi synthetic - 5 litre	MOR010
Oil 5W/30	semi synthetic - 1 litre	MOR011
Running in oil	5 litre	MOR013
Dextron 2 ATF5 litre		MOR014
Dextron 2 ATF	1 litre	MOR015
EP80/90	gear oil - 5 litre	MOR020
EP80/90	gear oil - 1 litre	MOR021
LSD	gear oil - 5 litre	MOR022
Oil 10W/50	comp semi synthetic	MOR023
Mineral oil	1 litre	MOR025
Brake fluid	Dot 4 - 1 litre	MOR027
Brake fluid	Dot 4 - 500ML	MOR028
Carb cleaning spray		MOR029
MD4	maintenance spray	MOR030
Pavan	degreaser	MOR031
Prima	silicone spray	MOR032
Prise	anti seize spray	MOR033
Solvent brake cleaner		MOR034
LM grease	500gm tin	MOR035
Copper slip	500gm tin	MOR036
Liquimatic ATF	5 litres	MOR045
Rubber Grease	500gm tin	RUBBERGREASE

MORRIS LUBRICANTS

HEATER, AIR CON, WASH WIPE

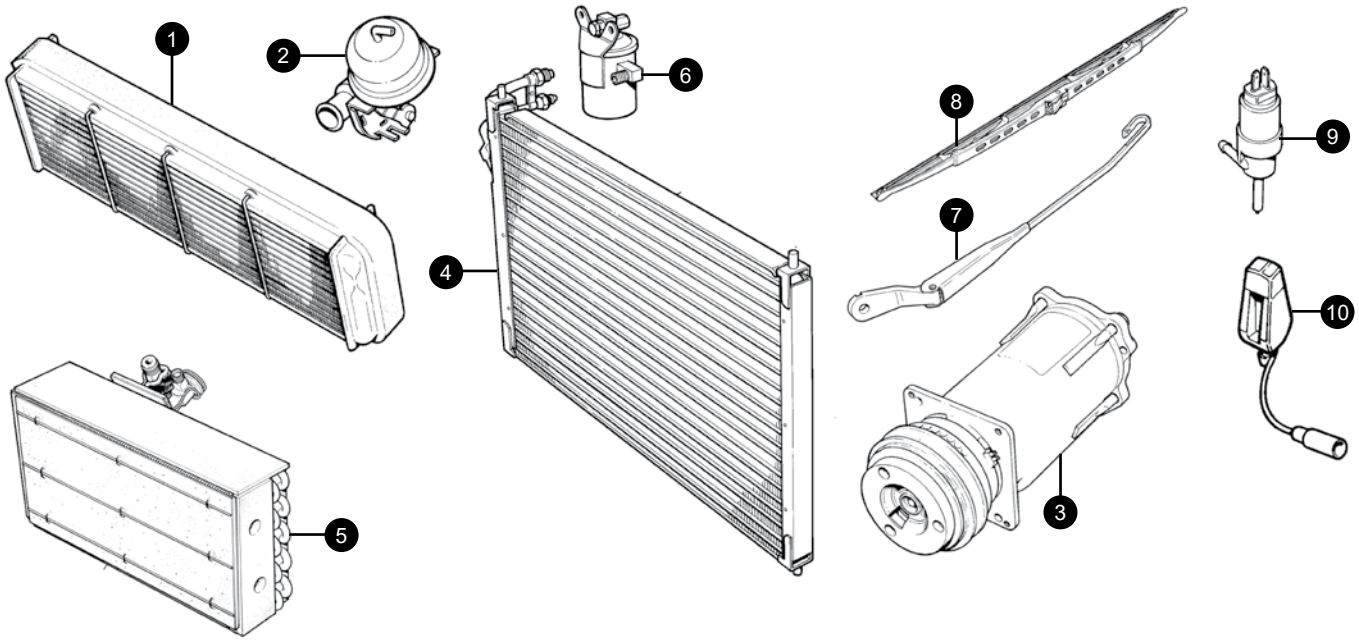

1. Heater matrix		
XJ40 to 667828	JLM11343	1
XJ40 from 667829	JLM11233	1
X300	JLM11949	1
2. Heater valve		
XJ40 to 667828	CBC2536	1
X300	MNA6711AC	1
3. Aircon compressor		
XJ40 to 667828	CCC4929	1
XJ40 3.2/4.0 from 667829	MHE7300AA	1
X300	MNA7300AB	1
4. Aircon condenser		
XJ40	CBC8074	1
X300 3.2/4.0	MNA7390AA	1
X300 6.0	MNA7390BA	1
5. Aircon evaporator		
XJ40 to 549575	JLM11230	1
XJ40 549576 to 667828	JLM2161	1
XJ40 from 667829	JLM20608	1
X300	JLM11944	1
6. Aircon dryer bottle		
XJ40	CBC2319	1
X300	MMD7410AA	1
7. Wiper arm		
XJ40 to 657729		
RHD	DBC1918	1
LHD	DBC1919	1
XJ40 from 657729/X300		
RHD	LMD7004AA	1
LHD	GNC8955AA	1
8. Wiper blade		
XJ40 to 657729	DBC1917	1
XJ40 from 657729/X300	GNA8960AA	1
9. Washer pump		
XJ40	JLM20122	1
X300	LNA7031CA	1
10. Washer jet		
XJ40 to 594475	DBC4997	1
XJ40 from 594476	DBC5157	1
X300	LNA7096AA	1

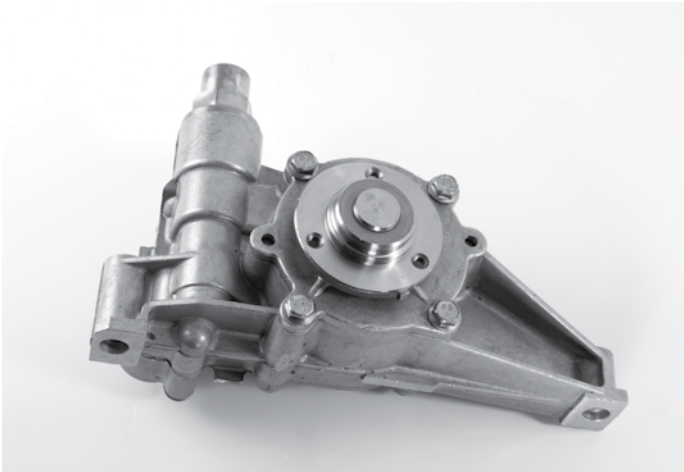

+44 1746 765432
sales.uk@sngbarratt.com
+33 385 201420
france@sngbarratt.com
018 01 833 833 (DE only)
sales.de@sngbarratt.com
+31 13 521 1552
sales.nl@sngbarratt.com
+1 800 452 4787
sales.usa@sngbarratt.com

Order your parts online...

- ✓ Modern and dynamic look
- ✓ Easier and faster Parts Finder for easier ordering
- ✓ Updated illustrations for E-Type and XK
- ✓ Multi-lingual including French, Dutch and German
- ✓ Phone and tablet compatible

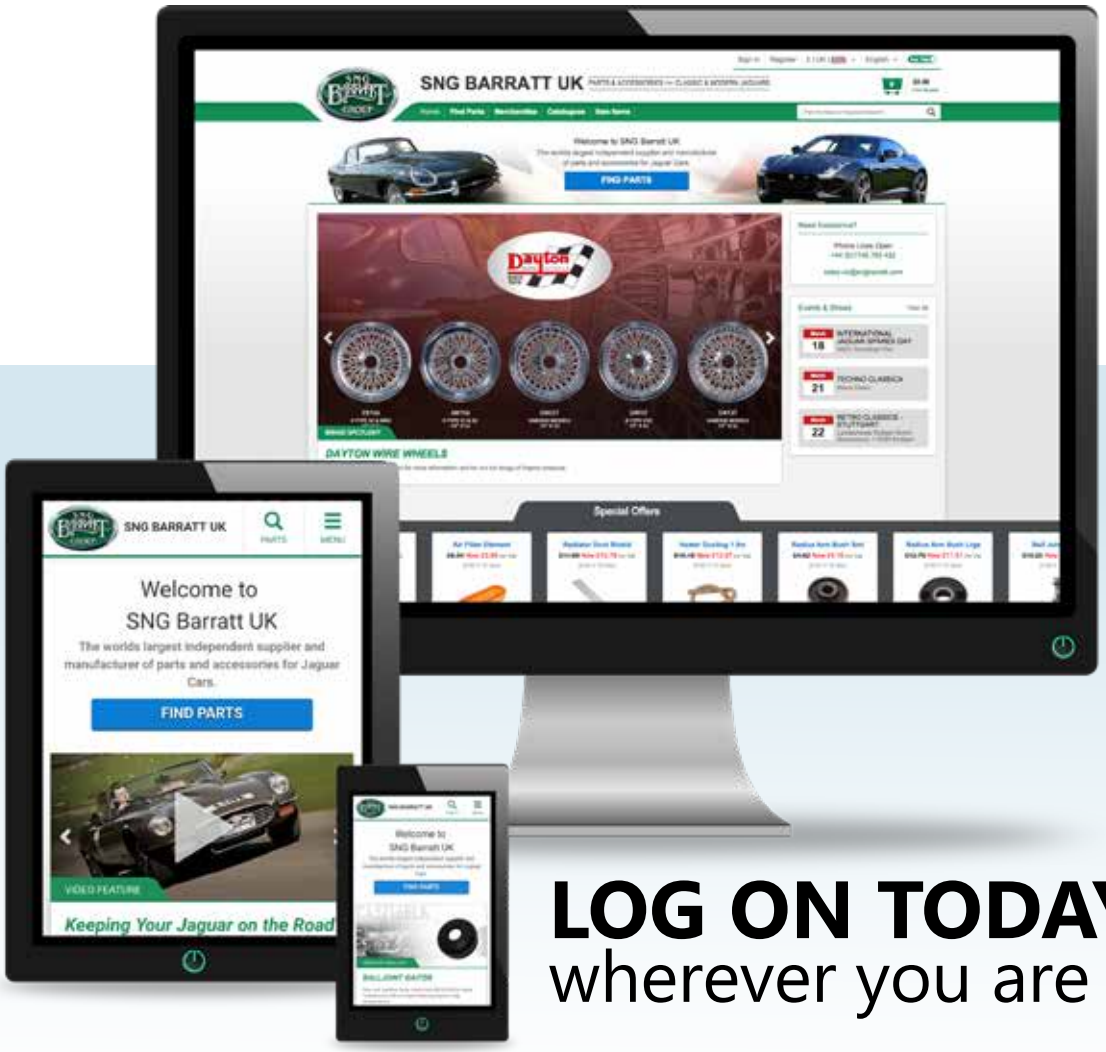

LOG ON TODAY
wherever you are

www.sngbarratt.com

ALL MODELS COVERED • UPGRADES • PARTS MADE IN HOUSE
OVER 50,000 PARTS AVAILABLE • EASY ONLINE ORDERING

S·N·G
BARRATT
GROUP

www.sngbarratt.com